CE EMC

TEST REPORT

For

Power Adaptor

Model: LE-0316xyzuu (x = A or B; y = 1230, 1200, 1500, 1600, 1700, 1800, 1850, 1900, 1950, 2000, 2200, 2400, 3000, 0512, 0515 or 0524; z = 60, 70, 72, 75, 80, 84, 85 or 90; u = 0-9, A-Z or Blank); LE-0317xyzuu (x = A or B; y = 1230, 1200, 1500, 1600, 1700, 1800, 1850, 1900, 1950, 2000, 2200, 2400, 3000, 0512, 0515 or 0524; z = 080, 090, 096, 100, 108, 110 or 120; u = 0-9, A-Z or Blank); LE-0317A-S02; LE-0317A-S06; LE-0317A-S07; LE-0317A-S08; LE-0317AS120A

Trade Name: LE

Issued for

Lien Electronics Inc.
10FL, No. 205-2, Beishin Rd., Sec. 3, Hsintien City,
Taipei, Taiwan, R.O.C.

Issued by

Compliance Certification Services Inc.
No. 81-1, Lane 210, Bade Rd., 2, Luchu Hsiang,
Taoyuan Hsien, (338) Taiwan, R.O.C.
TEL: 886-3-324-0332
FAX: 886-3-324-5235

ACCREDITED

TAF
Testing Laboratory
0363

Note: *This report shall not be reproduced except in full, without the written approval of Compliance Certification Services Inc. Ltd. This document may be altered or revised by Compliance Certification Services Inc. personnel only, and shall be noted in the revision section of the document.*

TABLE OF CONTENTS

1 TEST RESULT CERTIFICATION 3

2 EUT DESCRIPTION 4

3 TEST METHODOLOGY 7

3.1 EUT SYSTEM OPERATION 7
3.2 DECISION OF FINAL TEST MODE 7

4 SETUP OF EQUIPMENT UNDER TEST 8

5 FACILITIES AND ACCREDITATIONS 8

5.1 FACILITIES 8
5.2 LABORATORY ACCREDITATIONS AND LISTINGS 9

6 INSTRUMENT AND CALIBRATION 10

6.1 MEASURING INSTRUMENT CALIBRATION 10
6.2 TEST AND MEASUREMENT EQUIPMENT 10

7 LINE CONDUCTED & RADIATED EMISSION TEST 13

7.1 LIMIT 13
7.2 TEST PROCEDURE OF LINE CONDUCTED EMISSION 14
7.3 TEST PROCEDURE OF COMMON MODE CONDUCTED EMISSION FOR TELECOMMUNICATION PORT 15
7.4 TEST PROCEDURE OF RADIATED EMISSION 16
7.5 TEST RESULTS 18

8 POWER HARMONICS TEST 22

9 POWER VOLTAGE FLUCTUATION / FLICKER TEST 24

10 ELECTROSTATIC DISCHARGE (ESD) IMMUNITY TEST 26

11 RADIATED ELECTROMAGNETIC FIELD IMMUNITY TEST 29

12 FAST TRANSIENTS/BURST IMMUNITY TEST 32

13 SURGE IMMUNITY TEST 34

14 CONDUCTED DISTRBANCE/INDUCED RADIO-FREQUENCY FIELD IMMUNITY TEST 36

15 POWER FREQUENCY MAGNETIC FIELD IMMUNITY TEST 38

16 VOLTAGE DIPS / SHORT INTERRUPTIONS 40

APPENDIX I - PHOTOGRAPHS OF TEST SETUP 42

APPENDIX II – TEST RESULT OF EN 61000-3-2/-3 49

1 TEST RESULT CERTIFICATION

Applicant: **Lien Electronics Inc.**
10FL, No. 205-2, Beishin Rd., Sec. 3, Hsintien City, Taipei, Taiwan, R.O.C.

Manufacturer:
1. **Strong Power Electronics Manufactory**
Long Xi 3rd Industrial Area Xue Yuan Rd.,
Long Gang Shenzhen, P.R. China
2. **Strong Power Electronics Manufactory**
1FL, West Area, No. 3 factory buildings, Dragontown Industrial Park,
Ging Lin Road (West), Zhong Xin Cheng, LongGang,
ShenZhen, Guangdong Province,China
3. **Lien Electronics Inc.**
10FL, No. 205-2, Beishin Rd., Sec. 3, Hsintien City, Taipei, Taiwan, R.O.C.

Equipment Under Test: Power Adaptor

Trade Name: LE

Model: LE-0316xyzuu (x = A or B; y = 1230, 1200, 1500, 1600, 1700, 1800, 1850, 1900, 1950, 2000, 2200, 2400, 3000, 0512, 0515 or 0524; z = 60, 70, 72, 75, 80, 84, 85 or 90; u = 0-9, A-Z or Blank);
LE-0317xyzuu (x = A or B; y = 1230, 1200, 1500, 1600, 1700, 1800, 1850, 1900, 1950, 2000, 2200, 2400, 3000, 0512, 0515 or 0524; z = 080, 090, 096, 100, 108, 110 or 120; u = 0-9, A-Z or Blank);
LE-0317A-S02; LE-0317A-S06; LE-0317A-S07; LE-0317A-S08; LE-0317AS120A

Detailed EUT Description: See Item 2 of this report

Date of Test: November 23 ~ 24, 2005

Applicable Standard	Class/Limit/Criterion	Test Result
EN 55022: 1998 + A1: 2000 + A2: 2003	Class B	No non-compliance noted
EN 61000-3-2: 2000	Class A	No non-compliance noted
EN 61000-3-3: 1995 + A1: 2001	Limit	No non-compliance noted
EN 55024: 1998 + A1: 2001 + A2: 2003, including		
IEC 61000-4-2: 1995 + A1: 1998 + A2: 2000	Criterion B	No non-compliance noted
IEC 61000-4-3: 2002 + A1: 2002	Criterion A	No non-compliance noted
IEC 61000-4-4: 1995 + A1: 2000 + A2: 2001	Criterion B	No non-compliance noted
IEC 61000-4-5: 1995 + A1: 2000	Criterion B	No non-compliance noted
IEC 61000-4-6: 1996 + A1: 2000	Criterion A	No non-compliance noted
IEC 61000-4-8: 1993 + A1: 2000	Criterion A	No non-compliance noted
IEC 61000-4-11: 1994 + A1: 2000	Criterion B/C/C	No non-compliance noted
Deviation from Applicable Standard		
This standards used are instructed by customers.		

The above equipment was tested by Compliance Certification Services Inc. for compliance with the requirements set forth in the EMC Directive 89/336/EEC, Amended by 92/31/EEC, 93/68/EEC and the technical standards mentioned above. The results of testing in this report apply only to the product/system, which was tested. Other similar equipment will not necessarily produce the same results due to production tolerance and measurement uncertainties.

Approved by: Kurt Chen

Kurt Chen
Director of Linkou Laboratory
Compliance Certification Services Inc.

Reviewed by: Susan Su

Susan Su
Section Manager of Linkou Laboratory
Compliance Certification Services Inc.

2 EUT DESCRIPTION

Product	Power Adaptor
Trade Name	LE
Model	LE-0316xyzuu (x = A or B; y = 1230, 1200, 1500, 1600, 1700, 1800, 1850, 1900, 1950, 2000, 2200, 2400, 3000, 0512, 0515 or 0524; z = 60, 70, 72, 75, 80, 84, 85 or 90; u = 0-9, A-Z or Blank); LE-0317xyzuu (x = A or B; y = 1230, 1200, 1500, 1600, 1700, 1800, 1850, 1900, 1950, 2000, 2200, 2400, 3000, 0512, 0515 or 0524; z = 080, 090, 096, 100, 108, 110 or 120; u = 0-9, A-Z or Blank); LE-0317A-S02; LE-0317A-S06; LE-0317A-S07; LE-0317A-S08; LE-0317AS120A
Housing Type	Plastic
EUT Power Rating	See Table 1
AC Power Cord Type	Unshielded, 1.8m (Detachable)
DC Power Cable Type	Unshielded, 1.8m (Non-Detachable) with a core

Note:

1. The difference between of all model numbers (list on this report) please see as below and Table 1:

- *x represents AC Input Type; x = A, B*

x	*AC Input Type*
A	*Class II (2 Pin)*
B	*Class I (3 Pin)*

- *y represents Output Voltage; y = 1230,1200,1500,1600,1700,1800,1850,1900,1950,2000,2200, 2400,3000,0512,0515 or 0524*

Table 1

Model	*AC Input Rating*	*DC Output Rating*			*Transformer Type*
		V	*A*	*Power MAX*	
LE-0316x123090UU	*100-240VAC, 50-60Hz, 1.5A*	*12V-30V*	*3A-7.5A*	*90*	*70-0316-2A*
LE-0316x123080UU	*100-240VAC, 50-60Hz, 1.5A*	*12V-30V*	*2.67A-6.67A*	*80*	*70-0316-2A*
LE-0316x123070UU	*100-240VAC, 50-60Hz, 1.5A*	*12V-30V*	*2.33A-5.83A*	*70*	*70-0316-2A*
LE-0316x120070UU	*100-240VAC, 50-60Hz, 1.5A*	*12V*	*5.83A*	*70*	*70-0316-2A*
LE-0316x120072UU	*100-240VAC, 50-60Hz, 1.5A*	*12V*	*6A*	*72*	*70-0316-2A*
LE-0316x120080UU	*100-240VAC, 50-60Hz, 1.5A*	*12V*	*6.67A*	*80*	*70-0316-2A*
LE-0316x120084UU	*100-240VAC, 50-60Hz, 1.5A*	*12V*	*7A*	*84*	*70-0316-2A*
LE-0316x120090UU	*100-240VAC, 50-60Hz, 1.5A*	*12V*	*7.5A*	*90*	*70-0316-2A*
LE-0316x150070UU	*100-240VAC, 50-60Hz, 1.5A*	*15V*	*4.67A*	*70*	*70-0316-2A*
LE-0316x150072UU	*100-240VAC, 50-60Hz, 1.5A*	*15V*	*4.8A*	*72*	*70-0316-2A*
LE-0316x150075UU	*100-240VAC, 50-60Hz, 1.5A*	*15V*	*5A*	*75*	*70-0316-2A*
LE-0316x150080UU	*100-240VAC, 50-60Hz, 1.5A*	*15V*	*5.33A*	*80*	*70-0316-2A*
LE-0316x150084UU	*100-240VAC, 50-60Hz, 1.5A*	*15V*	*5.6A*	*84*	*70-0316-2A*
LE-0316x150090UU	*100-240VAC, 50-60Hz, 1.5A*	*15V*	*6A*	*90*	*70-0316-2A*
LE-0316x160072UU	*100-240VAC, 50-60Hz, 1.5A*	*16V*	*4.5A*	*72*	*70-0316-2A*
LE-0316x160080UU	*100-240VAC, 50-60Hz, 1.5A*	*16V*	*5A*	*80*	*70-0316-2A*
LE-0316x160090UU	*100-240VAC, 50-60Hz, 1.5A*	*16V*	*5.63A*	*90*	*70-0316-2A*
LE-0316x170072UU	*100-240VAC, 50-60Hz, 1.5A*	*17V*	*4.24A*	*72*	*70-0316-2A*
LE-0316x170080UU	*100-240VAC, 50-60Hz, 1.5A*	*17V*	*4.7A*	*80*	*70-0316-2A*
LE-0316x170085UU	*100-240VAC, 50-60Hz, 1.5A*	*17V*	*5A*	*85*	*70-0316-2A*
LE-0316x170090UU	*100-240VAC, 50-60Hz, 1.5A*	*17V*	*5.3A*	*90*	*70-0316-2A*
LE-0316x180072UU	*100-240VAC, 50-60Hz, 1.5A*	*18V*	*4A*	*72*	*70-0316-2A*
LE-0316x180080UU	*100-240VAC, 50-60Hz, 1.5A*	*18V*	*4.44A*	*80*	*70-0316-2A*
LE-0316x180090UU	*100-240VAC, 50-60Hz, 1.5A*	*18V*	*5A*	*90*	*70-0316-2A*
LE-0316x185072UU	*100-240VAC, 50-60Hz, 1.5A*	*18.5V*	*3.89A*	*72*	*70-0316-2A*
LE-0316x185080UU	*100-240VAC, 50-60Hz, 1.5A*	*18.5V*	*4.32A*	*80*	*70-0316-2A*
LE-0316x185090UU	*100-240VAC, 50-60Hz, 1.5A*	*18.5V*	*4.86A*	*90*	*70-0316-2A*

Table 1

Model	AC Input Rating	DC Output Rating			Transformer Type
		V	A	Power MAX	
LE-0316x190072UU	100-240VAC, 50-60Hz, 1.5A	19V	3.79A	72	70-0316-2A
LE-0316x190080UU	100-240VAC, 50-60Hz, 1.5A	19V	4.21A	80	70-0316-2A
LE-0316x190090UU	100-240VAC, 50-60Hz, 1.5A	19V	4.74A	90	70-0316-2A
LE-0316x195072UU	100-240VAC, 50-60Hz, 1.5A	19.5V	3.69A	72	70-0316-2A
LE-0316x195080UU	100-240VAC, 50-60Hz, 1.5A	19.5V	4.1A	80	70-0316-2A
LE-0316x195090UU	100-240VAC, 50-60Hz, 1.5A	19.5V	4.62A	90	70-0316-2A
LE-0316x200072UU	100-240VAC, 50-60Hz, 1.5A	20V	3.6A	72	70-0316-2A
LE-0316x200080UU	100-240VAC, 50-60Hz, 1.5A	20V	4A	80	70-0316-2A
LE-0316x200090UU	100-240VAC, 50-60Hz, 1.5A	20V	4.5A	90	70-0316-2A
LE-0316x220072UU	100-240VAC, 50-60Hz, 1.5A	22V	3.27A	72	70-0316-2A
LE-0316x220080UU	100-240VAC, 50-60Hz, 1.5A	22V	3.64A	80	70-0316-2A
LE-0316x220090UU	100-240VAC, 50-60Hz, 1.5A	22V	4.09A	90	70-0316-2A
LE-0316x240072UU	100-240VAC, 50-60Hz, 1.5A	24V	3A	72	70-0316-2A
LE-0316x240080UU	100-240VAC, 50-60Hz, 1.5A	24V	3.33A	80	70-0316-2A
LE-0316x240084UU	100-240VAC, 50-60Hz, 1.5A	24V	3.5A	84	70-0316-2A
LE-0316x240090UU	100-240VAC, 50-60Hz, 1.5A	24V	3.75A	90	70-0316-2A
LE-0316x300072UU	100-240VAC, 50-60Hz, 1.5A	30V	2.4A	72	70-0316-2A
LE-0316x300080UU	100-240VAC, 50-60Hz, 1.5A	30V	2.67A	80	70-0316-2A
LE-0316x300090UU	100-240VAC, 50-60Hz, 1.5A	30V	3A	90	70-0316-2A
LE-0316x051280UU	100-240VAC, 50-60Hz, 1.5A	5V; 12V	0-5A; 0-6A	80	70-0316-2C
LE-0316x051270UU	100-240VAC, 50-60Hz, 1.5A	5V; 12V	0-5A; 0-5.5A	70	70-0316-2C
LE-0316x051260UU	100-240VAC, 50-60Hz, 1.5A	5V; 12V	0-5A; 0-4.5A	60	70-0316-2C
LE-0316x051590UU	100-240VAC, 50-60Hz, 1.5A	5V; 15V	0-5A; 0-5A	90	70-0316-2D
LE-0316x051580UU	100-240VAC, 50-60Hz, 1.5A	5V; 15V	0-5A; 0-5A	80	70-0316-2D
LE-0316x051570UU	100-240VAC, 50-60Hz, 1.5A	5V; 15V	0-5A; 0-4.5A	70	70-0316-2D
LE-0316x052480UU	100-240VAC, 50-60Hz, 1.5A	5V; 24V	0-5A; 0-3A	80	70-0316-2E
LE-0316x052470UU	100-240VAC, 50-60Hz, 1.5A	5V; 24V	0-5A; 0-2.8A	70	70-0316-2E
LE-0317A-S02	100-240VAC, 50-60Hz, 2.0A	15V	8A	120	70-0317-7
LE-0317A-S06	100-240VAC, 50-60Hz, 2.0A	19V	6.3A	120	70-0317-7
LE-0317A-S07	100-240VAC, 50-60Hz, 2.0A	19.5V	6.15A	120	70-0317-7
LE-0317A-S08	100-240VAC, 50-60Hz, 2.0A	20V	6A	120	70-0317-7
LE-0317AS120A	100-240VAC, 50-60Hz, 2.0A	12V-30V	4A-10A	120	70-0317-7
LE-0317x1230120uu	100-240VAC, 50-60Hz, 2.0A	12V-30V	4A-10A	120	70-0317-7
LE-0317x1230110uu	100-240VAC, 50-60Hz, 2.0A	12V-30V	3.67A-9.17A	110	70-0317-7
LE-0317x1230100uu	100-240VAC, 50-60Hz, 2.0A	12V-30V	3.33A-8.33A	100	70-0317-7
LE-0317x1230090uu	100-240VAC, 50-60Hz, 2.0A	12V-30V	3A-7.5A	90	70-0317-7
LE-0317x1200090uu	100-240VAC, 50-60Hz, 2.0A	12V	7.5A	90	70-0317-7
LE-0317x1200096uu	100-240VAC, 50-60Hz, 2.0A	12V	8A	96	70-0317-7
LE-0317x1200100uu	100-240VAC, 50-60Hz, 2.0A	12V	8.33A	100	70-0317-7
LE-0317x1200108uu	100-240VAC, 50-60Hz, 2.0A	12V	9A	108	70-0317-7
LE-0317x1200110uu	100-240VAC, 50-60Hz, 2.0A	12V	9.17A	110	70-0317-7
LE-0317x1200120uu	100-240VAC, 50-60Hz, 2.0A	12V	10A	120	70-0317-7
LE-0317x1500090uu	100-240VAC, 50-60Hz, 2.0A	15V	6A	90	70-0317-7
LE-0317x1500100uu	100-240VAC, 50-60Hz, 2.0A	15V	6.67A	100	70-0317-7
LE-0317x1500110uu	100-240VAC, 50-60Hz, 2.0A	15V	7.33A	110	70-0317-7
LE-0317x1500120uu	100-240VAC, 50-60Hz, 2.0A	15V	8A	120	70-0317-7
LE-0317x1600090uu	100-240VAC, 50-60Hz, 2.0A	16V	5.63A	90	70-0317-7
LE-0317x1600100uu	100-240VAC, 50-60Hz, 2.0A	16V	6.25A	100	70-0317-7
LE-0317x1600110uu	100-240VAC, 50-60Hz, 2.0A	16V	6.88A	110	70-0317-7
LE-0317x1600120uu	100-240VAC, 50-60Hz, 2.0A	16V	7.5A	120	70-0317-7

Table 1

Model	AC Input Rating	DC Output Rating			Transformer Type
		V	A	Power MAX	
LE-0317x1700090uu	100-240VAC, 50-60Hz, 2.0A	17V	5.3A	90	70-0317-7
LE-0317x1700100uu	100-240VAC, 50-60Hz, 2.0A	17V	5.88A	100	70-0317-7
LE-0317x1700110uu	100-240VAC, 50-60Hz, 2.0A	17V	6.47A	110	70-0317-7
LE-0317x1700120uu	100-240VAC, 50-60Hz, 2.0A	17V	7.06A	120	70-0317-7
LE-0317x1800090uu	100-240VAC, 50-60Hz, 2.0A	18V	5A	90	70-0317-7
LE-0317x1800100uu	100-240VAC, 50-60Hz, 2.0A	18V	5.56A	100	70-0317-7
LE-0317x1800110uu	100-240VAC, 50-60Hz, 2.0A	18V	6.11A	110	70-0317-7
LE-0317x1800120uu	100-240VAC, 50-60Hz, 2.0A	18V	6.67A	120	70-0317-7
LE-0317x1850090uu	100-240VAC, 50-60Hz, 2.0A	18.5V	4.86A	90	70-0317-7
LE-0317x1850100uu	100-240VAC, 50-60Hz, 2.0A	18.5V	5.4A	100	70-0317-7
LE-0317x1850110uu	100-240VAC, 50-60Hz, 2.0A	18.5V	5.95A	110	70-0317-7
LE-0317x1850120uu	100-240VAC, 50-60Hz, 2.0A	18.5V	6.49A	120	70-0317-7
LE-0317x1900090uu	100-240VAC, 50-60Hz, 2.0A	19V	4.74A	90	70-0317-7
LE-0317x1900100uu	100-240VAC, 50-60Hz, 2.0A	19V	5.26A	100	70-0317-7
LE-0317x1900110uu	100-240VAC, 50-60Hz, 2.0A	19V	5.79A	110	70-0317-7
LE-0317x1900120uu	100-240VAC, 50-60Hz, 2.0A	19V	6.32A	120	70-0317-7
LE-0317x1950090uu	100-240VAC, 50-60Hz, 2.0A	19.5V	4.62A	90	70-0317-7
LE-0317x1950100uu	100-240VAC, 50-60Hz, 2.0A	19.5V	5.13A	100	70-0317-7
LE-0317x1950110uu	100-240VAC, 50-60Hz, 2.0A	19.5V	5.64A	110	70-0317-7
LE-0317x1950120uu	100-240VAC, 50-60Hz, 2.0A	19.5V	6.15A	120	70-0317-7
LE-0317x2000090uu	100-240VAC, 50-60Hz, 2.0A	20V	4.5A	90	70-0317-7
LE-0317x2000100uu	100-240VAC, 50-60Hz, 2.0A	20V	5A	100	70-0317-7
LE-0317x2000110uu	100-240VAC, 50-60Hz, 2.0A	20V	5.5A	110	70-0317-7
LE-0317x2000120uu	100-240VAC, 50-60Hz, 2.0A	20V	6A	120	70-0317-7
LE-0317x2200090uu	100-240VAC, 50-60Hz, 2.0A	22V	4.09A	90	70-0317-7
LE-0317x2200100uu	100-240VAC, 50-60Hz, 2.0A	22V	4.55A	100	70-0317-7
LE-0317x2200110uu	100-240VAC, 50-60Hz, 2.0A	22V	5A	110	70-0317-7
LE-0317x2200120uu	100-240VAC, 50-60Hz, 2.0A	22V	5.45A	120	70-0317-7
LE-0317x2400090uu	100-240VAC, 50-60Hz, 2.0A	24V	3.75A	90	70-0317-7
LE-0317x2400096uu	100-240VAC, 50-60Hz, 2.0A	24V	4A	96	70-0317-7
LE-0317x2400100uu	100-240VAC, 50-60Hz, 2.0A	24V	4.17A	100	70-0317-7
LE-0317x2400110uu	100-240VAC, 50-60Hz, 2.0A	24V	4.58A	110	70-0317-7
LE-0317x2400120uu	100-240VAC, 50-60Hz, 2.0A	24V	5A	120	70-0317-7
LE-0317x3000090uu	100-240VAC, 50-60Hz, 2.0A	30V	3A	90	70-0317-7
LE-0317x3000100uu	100-240VAC, 50-60Hz, 2.0A	30V	3.33A	100	70-0317-7
LE-0317x3000110uu	100-240VAC, 50-60Hz, 2.0A	30V	3.67A	110W	70-0317-7
LE-0317x3000120uu	100-240VAC, 50-60Hz, 2.0A	30V	4A	120	70-0317-7
LE-0317x0512100uu	100-240VAC, 50-60Hz, 2.0A	5V; 12V	0-6A; 0-6A	100	70-0317-3
LE-0317x0512090uu	100-240VAC, 50-60Hz, 2.0A	5V; 12V	0-6A; 0-6A	90	70-0317-3
LE-0317x0512080uu	100-240VAC, 50-60Hz, 2.0A	5V; 12V	0-6A; 0-6A	80	70-0317-3
LE-0317x0515100uu	100-240VAC, 50-60Hz, 2.0A	5V; 15V	0-6A; 0-6A	100	70-0317-4
LE-0317x0515080uu	100-240VAC, 50-60Hz, 2.0A	5V; 15V	0-6A; 0-6A	80	70-0317-4
LE-0317x0524100uu	100-240VAC, 50-60Hz, 2.0A	5V; 24V	0-6A; 0-4A	100	70-0317-5
LE-0317x0524080uu	100-240VAC, 50-60Hz, 2.0A	5V; 24V	0-6A; 0-3A	80	70-0317-5

- *z represents Output Voltage or Power Watt; z = 60,70,72,75,80,84,85 or 90 (For LE-0316xyzUU), the detail information please refer to Table 1*
- *z represents Output Voltage or Power Watt; z = 080,090,096,100,108,110 or 120 (For LE-0317xyzUU), the detail information please refer to Table 1*
- *u represents 0~9, A~Z or Blank just for marketing purpose only.*

2. *Client consigns five model samples (Model number: LE-0316B123090uu; LE-0316B051590uu; LE-0316B051580uu; LE-0317A3000120uu; LE-0317A0524100uu) to test. Therefore, testing Lab. just guarantees the units, which have been tested.*

3 TEST METHODOLOGY

3.1 EUT SYSTEM OPERATION

The EUT connected with resistive load at full and half load mode, during all testing.

3.2 DECISION OF FINAL TEST MODE

1. The following test mode(s) were scanned during the preliminary test:

   Mode 1
   Full Load (LE-0316B123090uu)

   Mode 2
   Full Load (LE-0316B051590uu)

   Mode 3
   Full Load (LE-0316B051580uu)

   Mode 4
   Full Load (LE-0317A3000120uu)

   Mode 5
   Full Load (LE-0317A0524100uu)

   Mode 6
   Half Load (LE-0317A0524100uu)

2. After the preliminary scan, the following test modes were found to produce the highest emission level.

   Mode 5

Then, the EUT configuration and cable configuration of the above highest emission mode was chosen for all final test items.

4 SETUP OF EQUIPMENT UNDER TEST

Setup Diagram

See test photographs attached in Appendix 1 for the actual connections between EUT and support equipment.

Support Equipment

No.	Equipment	Model No.	Serial No.	FCC ID	Trade Name	Data Cable	Power Cord
1	Resistor Load x 2	N/A	N/A	N/A	N/A	N/A	Unshielded, 0.6m x 4
2	Multi-Meter (Immunity Test Only)	YF-370A	N/A	N/A	YFE	N/A	Unshielded, 0.6m x 2

Note: *All the above equipment/cables were placed in worse case positions to maximize emission signals during emission test.*

Grounding: *Grounding was in accordance with the manufacturer's requirements and conditions for the intended use.*

5 FACILITIES AND ACCREDITATIONS

5.1 FACILITIES

All measurement facilities used to collect the measurement data are located at
CCS Taiwan Linkou Lab at No. 81-1, Lane 210, Bade Rd., 2, Luchu Hsiang, Taoyuan Hsien, Taiwan.

The measurement facilities are constructed in conformance with the requirements of CISPR 16-1, ANSI C63.4 and other equivalent standards.

5.2 LABORATORY ACCREDITATIONS AND LISTINGS

The test facilities used to perform Electromagnetic compatibility tests are registered or accredited by the organizations listed in the following table which includes the recognized scope specifically.
This accredited organization maintains A2LA accreditation to ISO/IEC 17025 for the specific test listed in A2LA Certificate # 0824-01. The test results included in this report, however, are not covered by this accreditation.

Country	Agency	Scope of Accreditation	Logo
USA	A2LA	EN 55011, EN 55014-1/2, CISPR 11, CISPR 14-1/2, EN 55022, EN 55015, CISPR 22, CISPR 15, AS/NZS 3548, VCCI V3 (2001), CFR 47, FCC Part 15/18, CNS 13783-1, CNS 13439, CNS 13438, CNS 13803, CNS 14115, EN 55024, IEC 801-2, IEC 801-3, IEC 801-4, IEC/EN 61000-3-2, EIC/EN 61000-3-3, IEC/EN 61000-4-2/3/4/5/6/8/11, EN 50081-1/EN 61000-6-3, EN 50081-2/EN 61000-6-4, EN 50081-2/EN 61000-6-1: 2001	ACCREDITED 0824-01
USA	FCC	3/10 meter Open Area Test Sites to perform FCC Part 15/18 measurements	93105, 90471
Japan	VCCI	3/10 meter Open Area Test Sites and conducted test sites to perform radiated/conducted measurements	VCCI R-393/1066/725/879/1868 C-402/747/912
Norway	NEMKO	EN 50081-1/2, EN 50082-1/2, IEC 61000-6-1/2, EN 50091-2, EN 50130-4, EN 55011, EN 55013, EN 55014-1/2, EN 55015, EN 55022, EN 55024, EN 61000-3-2/3, EN 61326-1, IEC 61000-4-2/3/4/5/6/8/11, EN 60601-1-2, EN 300 328-2, EN 300 422-2, EN 301 419-1, EN 301 489-01/03/07/08/09/17, EN 301 419-2/3, EN 300 454-2, EN 301 357-2	ELA 124a ELA 124b ELA 124c
Taiwan	TAF	EN 300 328-1, EN 300 328-2, EN 300 220-1, EN 300 220-2, EN 300 220-3, 47 CFR FCC Part 15 Subpart C, EN 61000-3-2, EN 61000-3-3, CNS 13439, CNS 13783-1, CNS 14115, CNS 13438, AS/NZS CISPR 22, CNS 13022-1, IEC 61000-4-2/3/4/5/6/8/11, CNS 13022-2/3	TAF Testing Laboratory 0363
Taiwan	BSMI	CNS 13438, CNS 13783-1, CNS 13439, CNS 14115	SL2-IS-E-0014 / IN-E-0014 /A1-E-0014 /R1-E-0014 /R2-E-0014 /L1-E-0014
Canada	Industry Canada	RSS212, Issue 1	Canada IC 3991-3 IC 3991-4

Note: *No part of this report may be used to claim or imply product endorsement by A2LA, TAF or other government agency.*

6 INSTRUMENT AND CALIBRATION

6.1 MEASURING INSTRUMENT CALIBRATION

The measuring equipment utilized to perform the tests documented in this report has been calibrated once a year or in accordance with the manufacturer's recommendations, and is traceable under the IEC 17025 to international or national standards. Equipment has been calibrated by accredited calibration laboratories.

6.2 TEST AND MEASUREMENT EQUIPMENT

The following list contains measurement equipment used for testing. The equipment conforms to the requirement of CISPR 16-1, ANSI C63.2 and other required standards.

Calibration of all test and measurement, including any accessories that may effect such calibration, is checked frequently to ensure the accuracy. Adjustments are made and correction factors are applied in accordance with the instructions contained in the respective manual.

Equipment Used for Emission Measurement

Conducted Emission Test Site # 3				
Name of Equipment	**Manufacturer**	**Model**	**Serial Number**	**Calibration Due**
EMI Test Receiver	R&S	ESCS30	845552/030	03/16/2006
LISN	R&S	ESH2-Z5	843285/010	01/12/2006
LISN	R&S	ESH3-Z5	848773/014	10/24/2006

Note: *The measurement uncertainty is less than +/- 2.83dB, which is evaluated as per the NAMAS NIS 81 and CISPR/A/291/CDV.*

Open Area Test Site # 5				
Name of Equipment	**Manufacturer**	**Model**	**Serial Number**	**Calibration Due**
Spectrum Analyzer	ADVANTEST	R3132	91700456	N.C.R
EMI Test Receiver	R&S	ESVS10	846285/016	06/07/2006
Bilog Antenna	Sunol Sciences	JB1	A031905	04/15/2006
Turn Table	CCS	CC-T-1F	N/A	N.C.R
Antenna Tower	CCS	CC-A-1F	N/A	N.C.R
Controller	CCS	CC-C-1F	04	N.C.R
RF Switch	ANRITSU	MP59B	10877	N.C.R
Site NSA	CCS	N/A	N/A	12/17/2005
DECOUPLING NETWORK	FCC	F-201-DCN-1-18MM	12	03/17/2006

Note: *The measurement uncertainty is less than +/- 3.36dB, which is evaluated as per the NAMAS NIS 81 and CISPR/A/291/CDV.*

Power Harmonic & Voltage Fluctuation/Flicker Measurement (EN 61000-3-2&-3-3)				
Name of Equipment	**Manufacturer**	**Model**	**Serial Number**	**Calibration Due**
HARMONICS SYSTEM	EMC-PARTNER	HARMONICS-1000	094	11/04/2006

Equipment Used for Immunity Measurement

ESD Test Site (IEC/EN 61000-4-2)				
Name of Equipment	**Manufacturer**	**Model**	**Serial Number**	**Calibration Due**
ESD Generator	EM TEST	P30C	0603-01	07/10/2006

Radiated Electromagnetic Field Immunity Test Site (IEC/EN 61000-4-3)				
Name of Equipment	**Manufacturer**	**Model**	**Serial Number**	**Calibration Due**
S.G.	R&S	SMY02	100094	08/09/2006
Power Meter	R&S	NRVD	837794/029	08/09/2006
Power Sensor	R&S	URV5-Z2	835640/015	08/09/2006
Power Sensor	R&S	URV5-Z2	835640/016	08/09/2006
Power Amplifier	ar	150W1000	300300	N.C.R

Fast Transients/Burst Test Site (IEC/EN 61000-4-4)				
Name of Equipment	**Manufacturer**	**Model**	**Serial Number**	**Calibration Due**
EMC TEST SYSTEM	EMC-PARTNER	TRANSIENT-2000	754	09/07/2006

Surge Immunity Test Site (IEC/EN EN 61000-4-5)				
Name of Equipment	**Manufacturer**	**Model**	**Serial Number**	**Calibration Due**
Surge Tester	HAEFELY TRENCH	PSUGER 4010	583 334-71	08/30/2006

CS Test Site (IEC/EN 61000-4-6)				
Name of Equipment	**Manufacturer**	**Model**	**Serial Number**	**Calibration Due**
S.G.	R&S	SMY02	100094	08/09/2006
Power Meter	R&S	NRVD	837794/029	08/09/2006
Power Sensor	R&S	URV5-Z2	835640/015	08/09/2006
Power Sensor	R&S	URV5-Z2	835640/016	08/09/2006
Power Amplifier	ar	500A100A	300299	N.C.R
CDN	Lüthi	801-M3	1879	03/04/2006
CDN	FRANKONIA	CDN-M2	A3002010	08/02/2006

Power Frequency Magnetic Field Immunity Test Site (IEC/EN 61000-4-8)				
Name of Equipment	**Manufacturer**	**Model**	**Serial Number**	**Calibration Due**
TRIAX ELF Magnetic Field Meter	F.W.BELL	4090	9711	11/21/2006
Magnetic Field Tester	HAEFELY TRENCH	MAG 100.1	080 938-01	N.C.R

Voltage Dips/Short Interruption and Voltage Variation Immunity Test Site (IEC/EN 61000-4-11)				
Name of Equipment	**Manufacturer**	**Model**	**Serial Number**	**Calibration Due**
Dips/Interruption and Variations Simulator	HAEFELY TRENCH	PLINE 1610	080 344-05	04/10/2006

7 LINE CONDUCTED & RADIATED EMISSION TEST

7.1 LIMIT

Maximum permissible level of Line Conducted Emission

Frequency (MHZ)	Class A (dBuV)		Class B (dBuV)	
	Quasi-peak	Average	Quasi-peak	Average
0.15 - 0.5	79	66	66 - 56	56 - 46
0.50 - 5.0	73	60	56	46
5.0 - 30.0	73	60	60	50

Note: *The lower limit shall apply at the transition frequency.*

Maximum permissible level of Common Mode Conducted Emission (Telecommunication Ports)

CLASS A

Frequency (MHZ)	Voltage Limit (dBuV)		Current Limit (dBuA)	
	Quasi-peak	Average	Quasi-peak	Average
0.15 - 0.5	97 – 87	84 - 74	53 – 43	40 – 30
0.5 - 30.0	87	74	43	30

Note: *The lower limit shall apply at the transition frequency.*

CLASS B

Frequency (MHZ)	Voltage Limit (dBuV)		Current Limit (dBuA)	
	Quasi-peak	Average	Quasi-peak	Average
0.15 - 0.5	84 - 74	74 - 64	40 – 30	30 – 20
0.5 - 30.0	74	64	30	20

Note: *The lower limit shall apply at the transition frequency.*

Maximum permissible level of Radiated Emission measured at 10 meter

Frequency (MHZ)	Class A (dBuV/m)	Class B (dBuV/m)
	Quasi-peak	Quasi-peak
30 – 230	40	30
230 - 1000	47	37

Note: *The lower limit shall apply at the transition frequency.*

7.2 TEST PROCEDURE OF LINE CONDUCTED EMISSION

Procedure of Preliminary Test

- The EUT was set up as per the test configuration to simulate typical usage per the user's manual. When the EUT is a tabletop system, a wooden table with a height of 0.8 meters is used and is placed on the ground plane as per EN 55022 (see Test Facility for the dimensions of the ground plane used). When the EUT is a floor-standing equipment, it is placed on the ground plane which has a 3-12 mm non-conductive covering to insulate the EUT from the ground plane.
- Support equipment, if needed, was placed as per EN 55022.
- All I/O cables were positioned to simulate typical actual usage as per EN 55022.
- The test equipment EUT installed received AC power, 230VAC/50Hz, through a Line Impedance Stabilization Network (LISN), which supplied power source and was grounded to the ground plane.
- All support equipment received power from a second LISN.
- The EUT test program was started. Emissions were measured on each current carrying line of the EUT using an EMI Test Receiver connected to the LISN powering the EUT.
- The Receiver scanned from 150kHz to 30MHz for emissions in each of the test modes.
- During the above scans, the emissions were maximized by cable manipulation.
- The test mode(s) described in Item 3.2 were scanned during the preliminary test.
- After the preliminary scan, we found the test mode described in Item 3.2 producing the highest emission level.
- The EUT configuration and cable configuration of the above highest emission level were recorded for reference of the final test.

Procedure of Final Test

- EUT and support equipment were set up on the test bench as per the configuration with highest emission level in the preliminary test.
- A scan was taken on both power lines, Line 1 and Line 2, recording at least the six highest emissions. Emission frequency and amplitude were recorded into a computer in which correction factors were used to calculate the emission level and compare reading to the applicable limit. If EUT emission level was less –2dB to the Average limit in Q.P. mode, then the emission signal was re-checked using an Average detector.
- The test data of the worst-case condition(s) was recorded.

Data Sample:

Freq. (MHz)	Q.P. Raw (dBuV)	Average Raw (dBuV)	Q.P. Limit (dBuV)	Average Limit (dBuV)	Q.P. Margin (dB)	Average Margin (dB)	Note
x.xx	43.95	---	56.00	46.00	-12.05	---	L1

Freq. = Emission frequency in MHz
Raw dBuV = Uncorrected Analyzer/Receiver reading + Insertion loss of LISN, if it > 0.5 dB
Limit dBuV = Limit stated in standard
Margin dB = Reading in reference to limit
Note = Current carrying line of reading
"---" = The emission level complied with the Average limits, with at least 2dB margin limits, so no further recheck.

Calculation Formula

Margin (dB) = RAW (dBuV) – Limit (dBuV)

7.3 TEST PROCEDURE OF COMMON MODE CONDUCTED EMISSION FOR TELECOMMUNICATION PORT

- Selecting ISN for unscreened cable or a current probe for screened cable to take measurement.
- The port of the EUT was connected to the remote side support equipment through the ISN/Current Probe and communication in normal condition.
- Making a overall range scan by using the test receiver controlled by controller and record at least six highest emissions for showing in the test report.
- Emission frequency and amplitude were recorded into a computer in which correction factors were used to calculate the emission level and compare reading to the applicable limit.
- In case of measuring on the screened cable, the current limit shall be applied, otherwise the voltage limit should be applied.
- The following test mode(s) were scanned during the preliminary test:

  No applicable, because EUT hasn't LAN Port or Modem Port.

Data Sample:

Freq. (MHz)	Q.P. Raw (dBuV)	AV. Raw (dBuV)	Q.P. Limit (dBuV)	AV. Limit (dBuV)	Q.P. Margin (dB)	AV. Margin (dB)	Note
x.xx	43.95	---	74.00	64.00	-30.05	---	---

Freq.: Emission frequency
Raw: Uncorrected Analyzer / Receiver reading
Limit: Limit stated in standard
Margin: Reading in reference to limit
Note: Current carrying line of reading
"-": The emission level complied with the Average limits, with at least 2 dB margin, so no further recheck.

7.4 TEST PROCEDURE OF RADIATED EMISSION

Procedure of Preliminary Test

- The equipment was set up as per the test configuration to simulate typical usage per the user's manual. When the EUT is a tabletop system, a wooden turntable with a height of 0.8 meters is used which is placed on the ground plane. When the EUT is a floor-standing equipment, it is placed on the ground plane which has a 3-12 mm non-conductive covering to insulate the EUT from the ground plane.
- Support equipment, if needed, was placed as per EN 55022.
- All I/O cables were positioned to simulate typical usage as per EN 55022.
- The EUT received AC power source, 230VAC/50Hz, from the outlet socket under the turntable. All support equipment received power from another socket under the turntable.
- Mains cables, telephone lines or other connections to auxiliary equipment located outside the test are shall drape to the floor, be fitted with ferrite clamps or ferrite tubes placed on the floor at the point where the cable reaches the floor and then routed to the place where they leave the turntable. No. extension cords shall be used to mains receptacle.
- The antenna was placed at 10 meter away from the EUT as stated in EN 55022. The antenna connected to the Spectrum Analyzer via a cable and at times a pre-amplifier would be used.
- The Analyzer / Receiver quickly scanned from 30MHz to 1000MHz. The EUT test program was started. Emissions were scanned and measured rotating the EUT to 360 degrees and positioning the antenna 1 to 4 meters above the ground plane, in both the vertical and the horizontal polarization, to maximize the emission reading level.
- The test mode(s) described in Item 3.2 were scanned during the preliminary test:
- After the preliminary scan, we found the test mode described in Item 3.2 producing the highest emission level.
- The EUT and cable configuration, antenna position, polarization and turntable position of the above highest emission level were recorded for the final test.

Procedure of Final Test

- EUT and support equipment were set up on the turntable as per the configuration with highest emission level in the preliminary test.
- The Analyzer / Receiver scanned from 30MHz to 1000MHz. Emissions were scanned and measured rotating the EUT to 360 degrees, varying cable placement and positioning the antenna 1 to 4 meters above the ground plane, in both the vertical and the horizontal polarization, to maximize the emission reading level.
- Recorded at least the six highest emissions. Emission frequency, amplitude, antenna position, polarization and turntable position were recorded into a computer in which correction factors were used to calculate the emission level and compare reading to the applicable limit and only Q.P. reading is presented.
- The test data of the worst-case condition(s) was recorded.

Data Sample:

Freq. (MHz)	Raw Data (dBuV)	Corr. Factor (dB/m)	Emiss. Level (dBuV/m)	Limits (dBuV/m)	Margin (dB)
xx.xx	14.00	12.20	26.20	30.00	-3.80

Freq. = Emission frequency in MHz
Raw Data (dBuV) = Uncorrected Analyzer / Receiver reading
Corr. Factor (dB/m) = Antenna factor + Cable loss – Amplifier gain
Emiss. Level (dBuV/m) = Raw reading converted to dBuV/m and CF added
Limit (dBuV/m) = Limit stated in standard
Margin (dB) = Reading in reference to limit
P = Peak Reading
Q = Quasi-peak Reading
A = Average Reading

Calculation Formula

Margin (dB) = Emiss. Level (dBuV/m) – Limits (dBuV/m)
Emission Level (dBuV/m) = Raw Data (dBuV) + Corr. Factor (dB/m)

7.5 TEST RESULTS

Line Conducted Emission

CCS Conduction Test 3

Job No.: 50803107
Date: 2005/11/24 Time: AM 03:28 Temp.(℃)/Hum.(%):25 ℃ / 55 %
Tested by: BILL CHENG
Standard: CISPR 22 / EN 55022 Class B Power Source: 230 Vac / 50Hz
Measured Line: L1
Company: LE
Product:
Model: LE-0317A0524100uu
Test Mode: 5

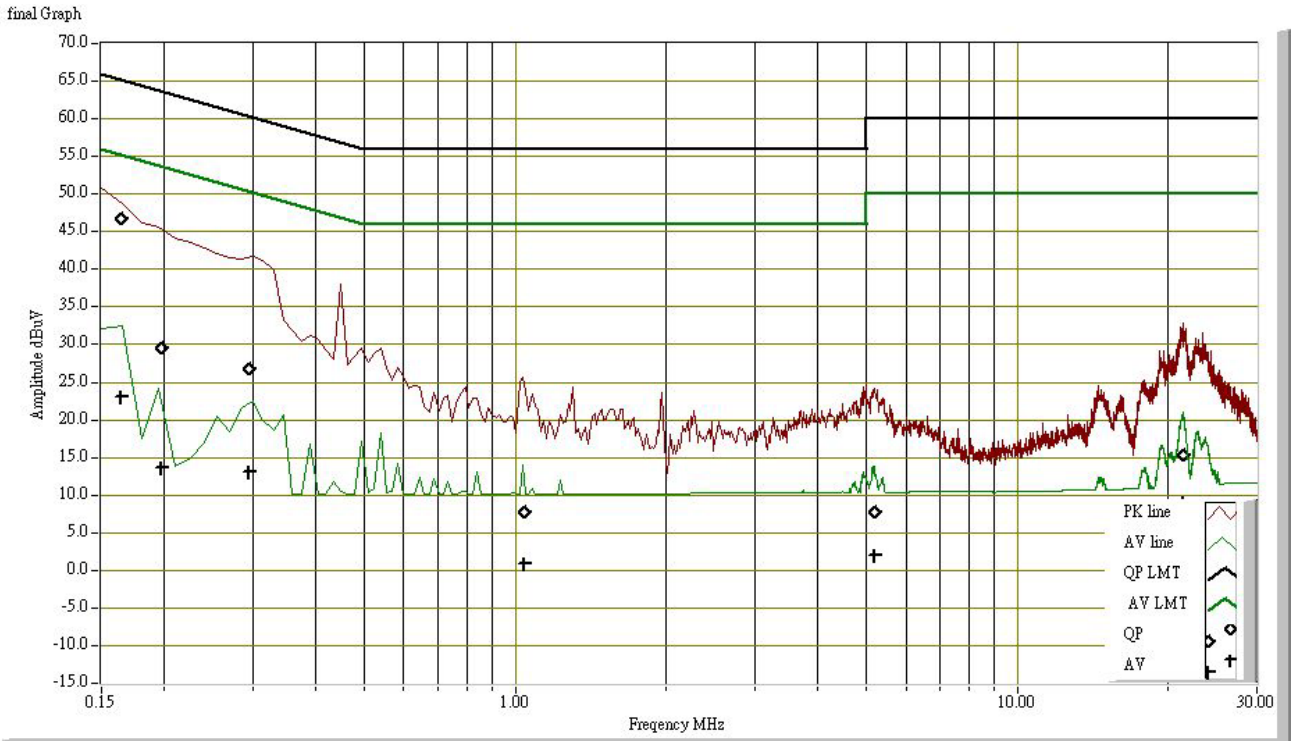

Freq. (MHz)	QP Reading	AV Reading	Corr. factor	QP Result	AV Result	QP Limit	AV Limit	QP Margin	AV Margin	Remark
0.164	46.640	23.150	10.100	56.740	33.250	65.267	55.267	-8.527	-22.017	PASS
0.198	29.580	13.610	10.100	39.680	23.710	63.706	53.706	-24.026	-29.996	PASS
0.295	26.760	13.000	10.100	36.860	23.100	60.391	50.391	-23.531	-27.291	PASS
1.042	7.700	0.870	10.200	17.900	11.070	56.000	46.000	-38.100	-34.930	PASS
5.190	7.640	1.930	10.400	18.040	12.330	60.000	50.000	-41.960	-37.670	PASS
21.375	15.320	9.020	11.137	26.457	20.157	60.000	50.000	-33.543	-29.843	PASS

L1 = Line One (Live Line)

CCS Conduction Test 3

Job No.: 50803107
Date: 2005/11/24 Time: AM 03:04 Temp.(℃)/Hum.(%):25 ℃ / 55 %
Tested by: BILL CHENG
Standard: CISPR 22 / EN 55022 Class B Power Source: 230 Vac / 50Hz
Measured Line: L2
Company: LE
Product:
Model: LE-0317A0524100uu
Test Mode: 5

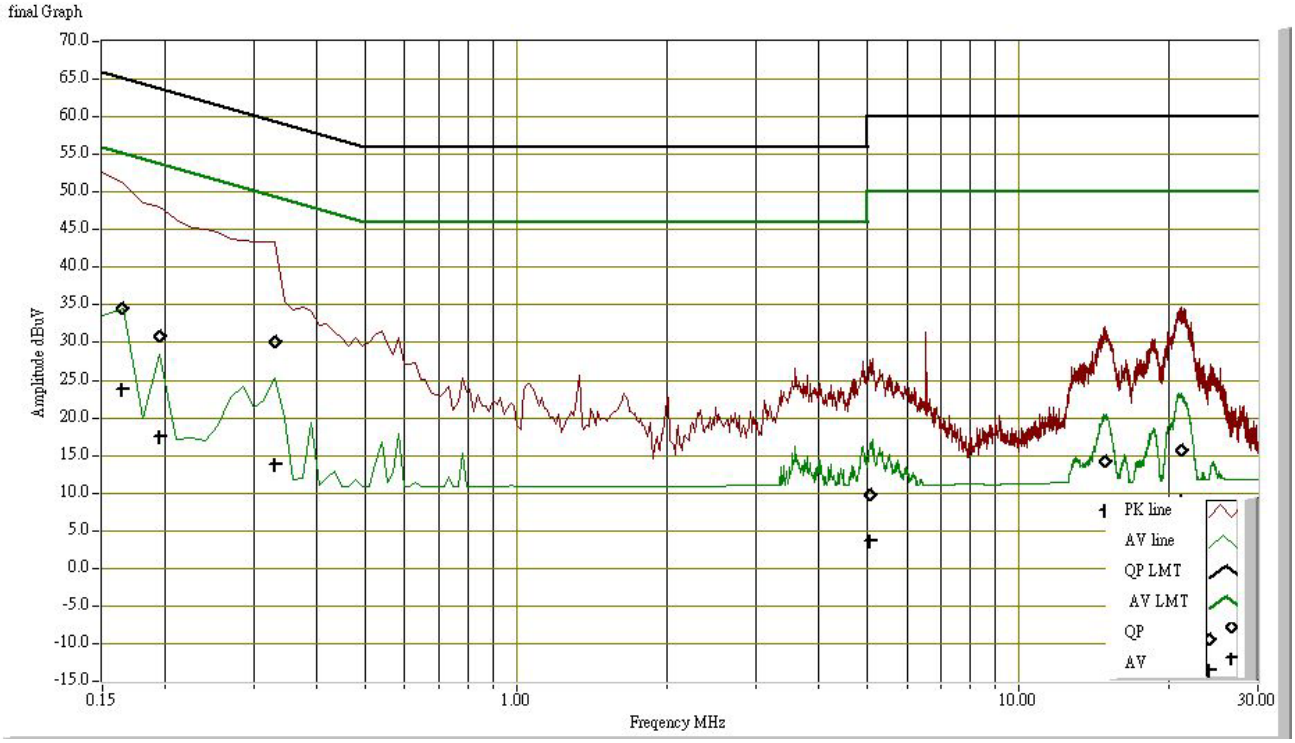

Freq. (MHz)	QP Reading	AV Reading	Corr. factor	QP Result	AV Result	QP Limit	AV Limit	QP Margin	AV Margin	Remark
0.164	34.460	23.750	11.044	45.504	34.794	65.258	55.258	-19.754	-20.464	PASS
0.195	30.880	17.580	10.920	41.800	28.500	63.821	53.821	-22.021	-25.321	PASS
0.330	30.160	13.840	10.930	41.090	24.770	59.441	49.441	-18.350	-24.670	PASS
5.068	9.700	3.610	11.100	20.800	14.710	60.000	50.000	-39.200	-35.290	PASS
14.913	14.140	7.730	11.398	25.538	19.128	60.000	50.000	-34.462	-30.872	PASS
21.180	15.640	9.020	11.747	27.387	20.767	60.000	50.000	-32.613	-29.233	PASS

L2 = Line Two (Neutral Line)

Common Mode Conducted Emission

Not applicable

Radiated Emission (A)

Model: LE-0317A0524100uu **Test Mode:** Mode 5

Temperature: 26°C **Humidity:** 55% RH

Detector Function: Quasi-peak. **Antenna:** Vertical at 10m

Tested by: Arno Hsieh **Test Results:** Pass

(The chart below shows the highest readings taken from the final data)

Freq. (MHz)	Raw Data (dBuV)	Corr. Factor (dB/m)	Emiss. Level (dBuV/m)	Limits (dBuV/m)	Margin (dB)
40.20	5.20	14.86	20.06	30.00	-9.94
65.00	13.10	9.20	22.30	30.00	-7.70
120.60	2.20	15.59	17.79	30.00	-12.21
135.40	7.00	15.29	22.29	30.00	-7.71
210.36	8.99	14.30	23.28	30.00	-6.72
267.60	5.80	15.70	21.49	37.00	-15.51

Radiated Emission (B)

Model: LE-0317A0524100uu **Test Mode:** Mode 5

Temperature: 26°C **Humidity:** 55% RH

Detector Function: Quasi-peak. **Antenna:** Horizontal at 10m

Tested by: Arno Hsieh **Test Results:** Pass

(The chart below shows the highest readings taken from the final data)

Freq. (MHz)	Raw Data (dBuV)	Corr. Factor (dB/m)	Emiss. Level (dBuV/m)	Limits (dBuV/m)	Margin (dB)
32.64	2.10	19.63	21.73	30.00	-8.27
52.00	8.00	9.18	17.18	30.00	-12.82
70.00	14.00	9.67	23.67	30.00	-6.33
80.00	13.00	9.22	22.22	30.00	-7.78
233.04	10.84	13.69	24.52	37.00	-12.48
295.14	6.57	16.44	23.01	37.00	-13.99

8 POWER HARMONICS TEST

Port : AC mains
Basic Standard : EN 61000-3-2 (2000)
Limits : ☒ CLASS A ; ☐ CLASS B; ☐ CLASS C ; ☐ CLASS D
Tested by : Michael Chen
Temperature : 25°C
Humidity : 53% RH

Limit:

Limits for Class A equipment	
Harmonics Order n	Max. permissible harmonics current A
Odd harmonics	
3	2.30
5	1.14
7	0.77
9	0.40
11	0.33
13	0.21
15<=n<=39	0.15x15/n
Even harmonics	
2	1.08
4	0.43
6	0.30
8<=n<=40	0.23x8/n

Limits for Class D equipment		
Harmonics Order n	Max. permissible harmonics current per watt mA/W	Max. permissible harmonics current A
Odd Harmonics only		
3	3.4	2.30
5	1.9	1.14
7	1.0	0.77
9	0.5	0.40
11	0.35	0.33
13	0.30	0.21
15<=n<=39	3.85/n	0.15x15/n

Block Diagram of Test Setup:

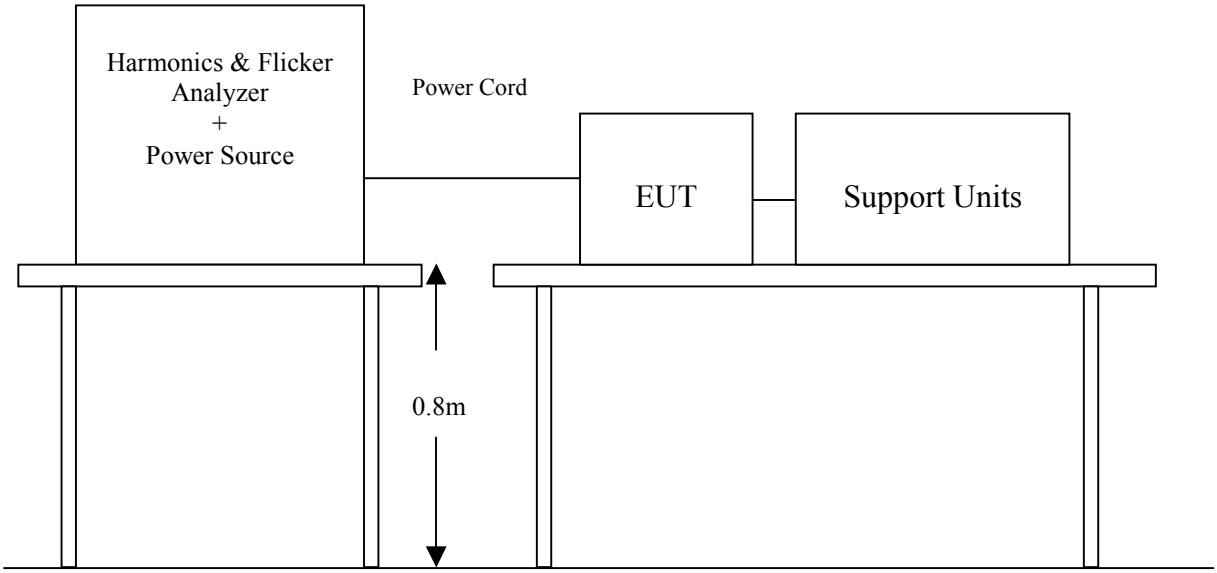

Test Procedure:

a. The EUT was placed on the top of a wooden table 0.8 meters above the ground and operated to produce the maximum harmonic components under normal operating conditions for each successive harmonic component in turn.

b. The correspondent test program of test instrument to measure the current harmonics emanated from EUT is chosen. The measure time shall be not less than the time necessary for the EUT to be exercised.

Test Result : (See Appendix II for details)

☒ **PASS**	☐ **FAIL**

9 POWER VOLTAGE FLUCTUATION / FLICKER TEST

Port : AC mains
Basic Standard : EN 61000-3-3 (1995 + A1: 2001)
Limits : §5 of EN 61000-3-3
Tested by : Michael Chen
Temperature : 25°C
Humidity : 53% RH

Limit:

TEST ITEM	LIMIT	REMARK
P_{st}	1.0	P_{st} means short-term flicker indicator.
P_{lt}	0.65	P_{lt} means long-term flicker indicator.
T_{dt} (ms)	500	T_{dt} means maximum time that dt exceeds 3 %.
d_{max} (%)	4%	d_{max} means maximum relative voltage change.
dc (%)	3.3%	dc means relative steady-state voltage change

Block Diagram of Test Setup:

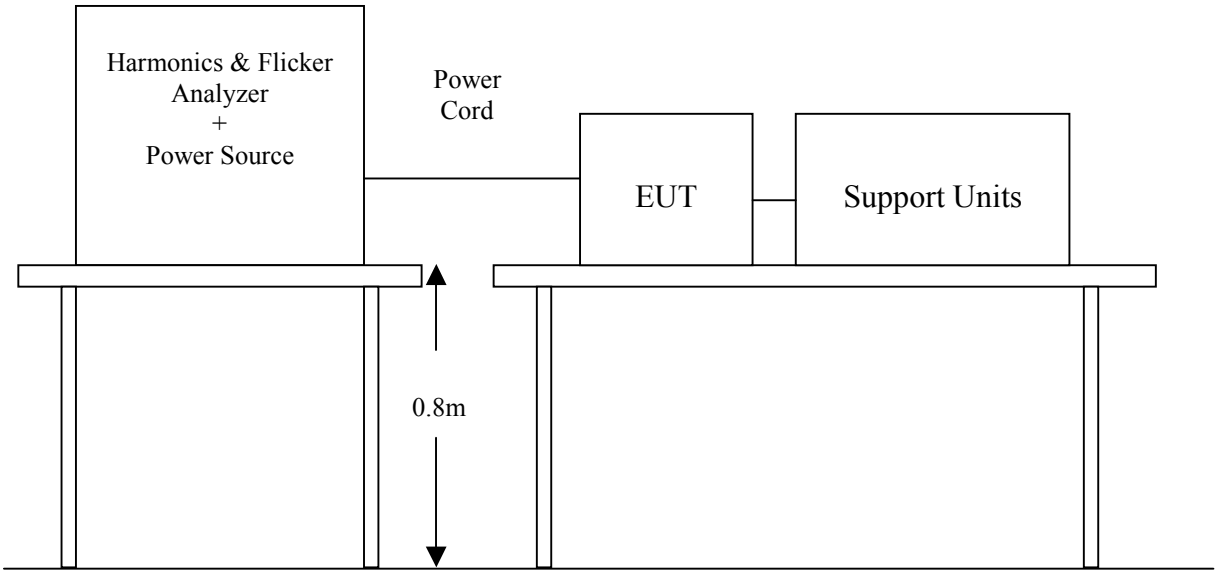

Test Procedure:

a. The EUT was placed on the top of a wooden table 0.8 meters above the ground and operated to produce the most unfavorable sequence of voltage changes under normal operating conditions.

b. During the flick measurement, the measure time shall include that part of whole operation cycle in which the EUT produce the most unfavorable sequence of voltage changes. The observation period for short-term flicker indicator is 10 minutes and the observation period for long-term flicker indicator is 2 hours.

Test Result: (See Appendix II for details)

Test Parameter	Measurement Value	Limit	Result
P_{st}	0.072	1.0	Pass
P_{lt}	0.072	0.65	Pass
T_{dt} (ms)	0	500	Pass
d_{max} (%)	0%	4%	Pass
dc (%)	0%	3.3%	Pass

10 ELECTROSTATIC DISCHARGE (ESD) IMMUNITY TEST

Port	:	Enclosure
Basic Standard	:	IEC/EN 61000-4-2
Test Level	:	± 8 kV (Air Discharge)
		± 4 kV (Contact Discharge)
		± 4 kV (Indirect Discharge)
Performance Criterion	:	B (Standard Required)
Tested by	:	Arno Hsieh
Temperature	:	24°C
Humidity	:	45% RH
Pressure	:	1006mbar

Block Diagram of Test Setup:

(The 470 k ohm resistors are installed per standard requirement.)

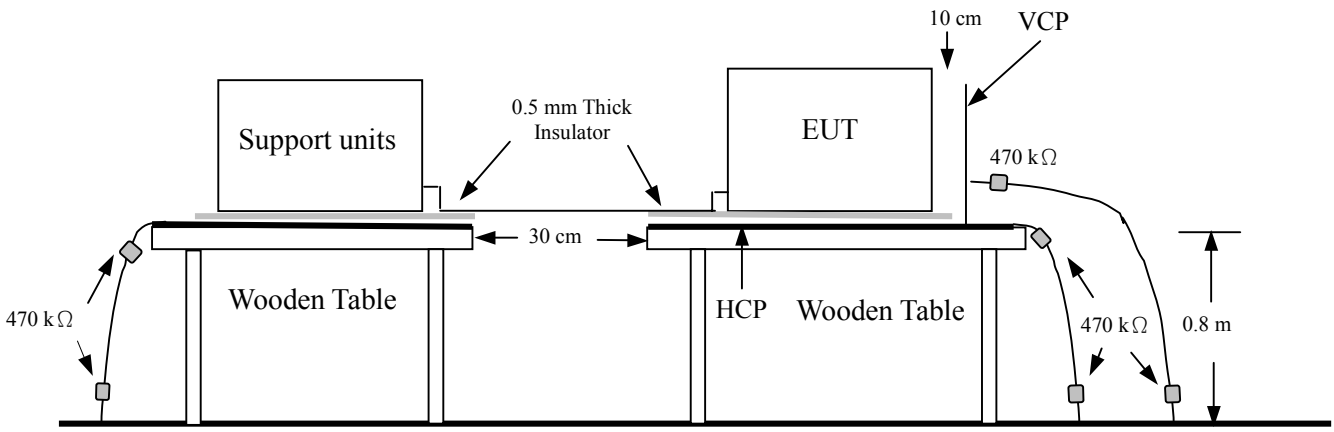

Ground Reference Plane

Test Procedure:

1. The EUT was located 0.1 m minimum from all side of the HCP.
2. The indirect support units were located 1 m minimum away from the EUT, but direct support unit was/were located at same location as EUT on the HCP and keep at a distance of 10 cm with EUT.
3. As per the requirement of EN 55024; applying direct contact discharge at the sides other than front of EUT at minimum 50 discharges (25 positive and 25 negative) if applicable, can't be applied direct contact discharge side of EUT then the indirect discharge shall be applied. One of the test points shall be subjected to at least 50 indirect discharge (contact) to the front edge of horizontal coupling plane.
4. Other parts of EUT where it is not possible to perform contact discharge then selecting appropriate points of EUT for air discharge, a minimum of 10 single air discharges shall be applied.
5. The application of ESD to the contact of open connectors is not required.
6. The EUT direct connection units also need to be applied ESD at the port of EUT cable connected.
7. Putting a mark on EUT to show tested points. The following test condition was followed during the tests.

Note: As per IEC/EN 61000-4-2, two 470k bleed resistors cable is connected between the EUT and HCP during the test applicable for power ungrounded or battery operating unit only.

The electrostatic discharges were applied as follows:

Amount of discharge	Voltage	Coupling	Result (Pass/Fail)
Mini 10 /Point	± 8 kV	Air Discharge	Pass
Mini 10 /Point	± 4 kV	Contact Discharge	Pass
Mini 25 /Point	± 4 kV	Indirect Discharge HCP	Pass
Mini 25 /Point	± 4 kV	Indirect Discharge VCP (Right)	Pass
Mini 25 /Point	± 4 kV	Indirect Discharge VCP (Left)	Pass
Mini 25 /Point	± 4 kV	Indirect Discharge VCP (Back)	Pass

No any discharge events occurred on the test.

Performance & Result:

☒ **Criteria A:** The apparatus continues to operate as intended. No degradation of performance or loss of function is allowed below a performance level specified by the manufacturer, when the apparatus is used as intended. In some cases the performance level may be replaced by a permissible loss of performance.

☐ **Criteria B:** The apparatus continues to operate as intended after the test. No degradation of performance or loss of function is allowed below a performance level specified by the manufacturer, when the apparatus is used as intended. In some cases the performance level may be replaced by a permissible loss of performance. During the test, degradation of performance is however allowed.

☐ **Criteria C:** Temporary loss of function is allowed, provided the functions self recoverable or can be restored by the operation of controls.

☒ **PASS** ☐ **FAIL**
Observation: No function degraded during the tests.

11 RADIATED ELECTROMAGNETIC FIELD IMMUNITY TEST

Port	:	Enclosure
Basic Standard	:	IEC/EN 61000-4-3
Requirements	:	3 V/m / with 80% AM. 1kHz Modulation.
Performance Criterion	:	A (Standard Required)
Tested by	:	Arno Hsieh
Temperature	:	24°C
Humidity	:	42% RH
Pressure	:	1006mbar

Block Diagram of Test Setup:

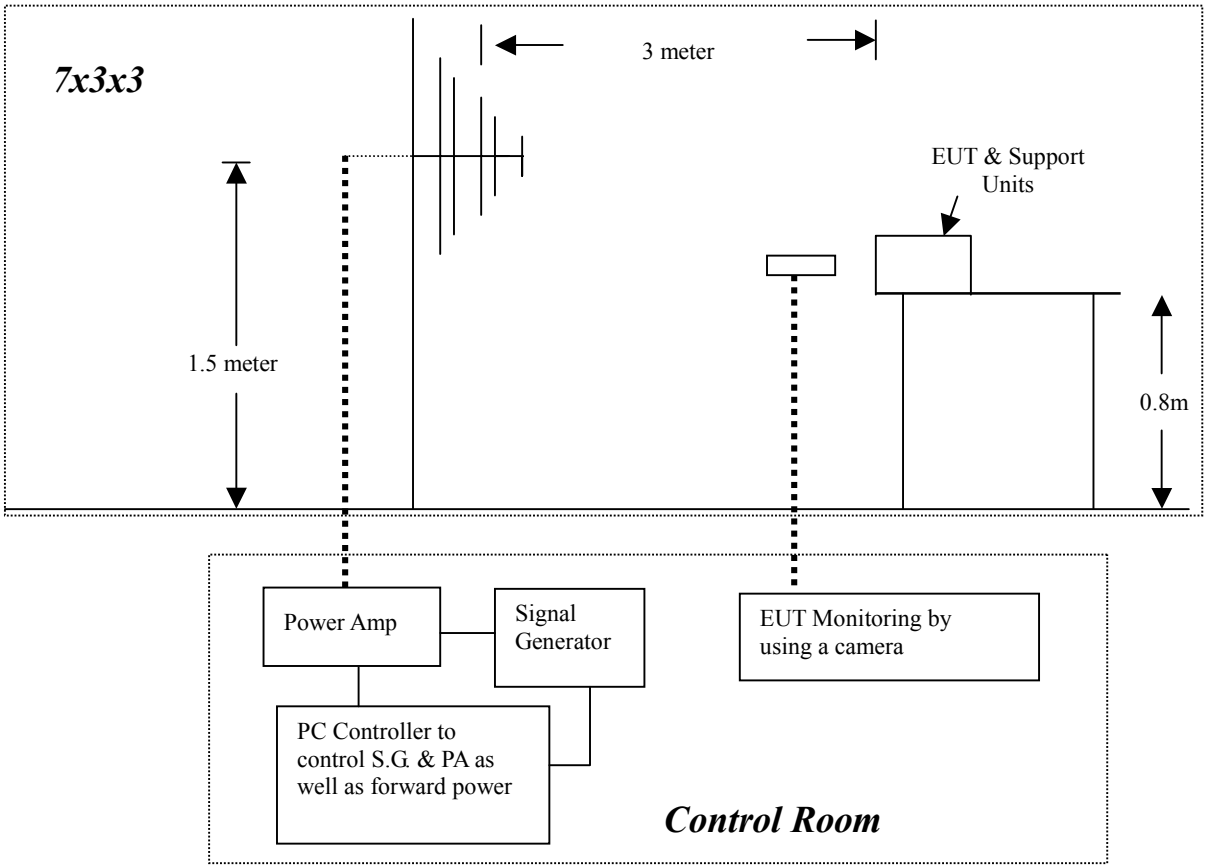

Test Procedure:

1. The EUT was located at the edge of supporting table keep 3 meter away from transmitting antenna, it just the calibrated square area of field uniformity. The support units were located outside of the uniformity area, but the cable(s) connected with EUT were exposed to the calibrated field as per IEC/EN 61000-4-3.
2. Setting the testing parameters of RS test software per IEC/EN 61000-4-3.
3. Performing the pre-test at each side of with double specified level (6V/m) at 4% steps.
4. From the result of pre-test in step 5, choice the worst side of EUT for final test from 80 MHz to 1000 MHz at 1% steps.
5. Recording the test result in following table.
6. It is not necessary to perform test as per annex A of EN 55024 if the EUT doesn't belong to ITE product.

Preliminary test conditions:

Test level : 6V/m
Steps : 4 % of fundamental
Dwell Time : 3 sec

Range (MHz)	Field	Modulation	Polarity	Position	Result (Pass/Fail)
80-1000	6V/m	Yes	H	Front	Pass
80-1000	6V/m	Yes	V	Front	Pass
80-1000	6V/m	Yes	H	Right	Pass
80-1000	6V/m	Yes	V	Right	Pass
80-1000	6V/m	Yes	H	Back	Pass
80-1000	6V/m	Yes	V	Back	Pass
80-1000	6V/m	Yes	H	Left	Pass
80-1000	6V/m	Yes	V	Left	Pass

Final test conditions:

Test level : 3V/m
Steps : 1 % of fundamental
Dwell Time : 3 sec

Range (MHz)	Field	Modulation	Polarity	Position	Result (Pass/Fail)
80-1000	3V/m	Yes	H	Front	Pass
80-1000	3V/m	Yes	V	Front	Pass

Performance & Result:

☒ **Criteria A:** The apparatus continues to operate as intended. No degradation of performance or loss of function is allowed below a performance level specified by the manufacturer, when the apparatus is used as intended. In some cases the performance level may be replaced by a permissible loss of performance.

☐ **Criteria B:** The apparatus continues to operate as intended after the test. No degradation of performance or loss of function is allowed below a performance level specified by the manufacturer, when the apparatus is used as intended. In some cases the performance level may be replaced by a permissible loss of performance. During the test, degradation of performance is however allowed.

☐ **Criteria C:** Temporary loss of function is allowed, provided the functions self recoverable or can be restored by the operation of controls.

☒ **PASS** ☐ **FAIL**
Observation: No function degraded during the tests.

12 FAST TRANSIENTS/BURST IMMUNITY TEST

Port : On Power Supply Lines

Basic Standard : IEC/EN 61000-4-4

Requirements : ± 1 kV for Power Supply Line

Performance Criteria : B (Standard Required)

Tested by : Arno Hsieh

Temperature : 24°C

Humidity : 45% RH

Pressure : 1006mbar

Block Diagram of Test Setup:

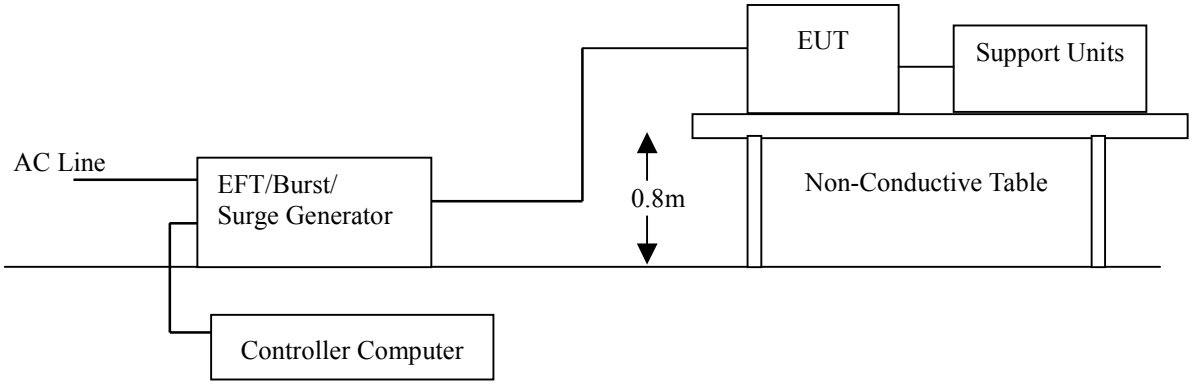

Test Procedure:

1. The EUT and support units were located on a wooden table 0.8 m away from ground reference plane.
2. A 1.0 meter long power cord was attached to EUT during the test.
3. The length of communication cable between communication port and clamp was keeping within 1 meter.
4. Injected test voltage to the EUT ports from minimum to standard request or client request.
5. Recording the test result as shown in following table.

Test conditions:

Impulse Frequency : 5kHz
Tr/Th : 5/50ns
Burst Duration : 15ms
Burst Period : 3Hz

Inject Line	Voltage kV	Inject Method	Result (Pass/Fail)
L	± 1	Direct	Pass
N	± 1	Direct	Pass
L + N	± 1	Direct	Pass

Performance & Result:

☒ **Criteria A:** The apparatus continues to operate as intended. No degradation of performance or loss of function is allowed below a performance level specified by the manufacturer, when the apparatus is used as intended. In some cases the performance level may be replaced by a permissible loss of performance.

☐ **Criteria B:** The apparatus continues to operate as intended after the test. No degradation of performance or loss of function is allowed below a performance level specified by the manufacturer, when the apparatus is used as intended. In some cases the performance level may be replaced by a permissible loss of performance. During the test, degradation of performance is however allowed.

☐ **Criteria C:** Temporary loss of function is allowed, provided the functions self recoverable or can be restored by the operation of controls.

☒ **PASS** ☐ **FAIL**
Observation: No function degraded during the tests.

13 SURGE IMMUNITY TEST

Port	:	Power Cord
Basic Standard	:	IEC/EN 61000-4-5
Requirements	:	± 1 kV (Line to Line)
Performance Criteria	:	B (Standard Required)
Tested by	:	Arno Hsieh
Temperature	:	24°C
Humidity	:	45% RH
Pressure	:	1006mbar

Block Diagram of Test Setup:

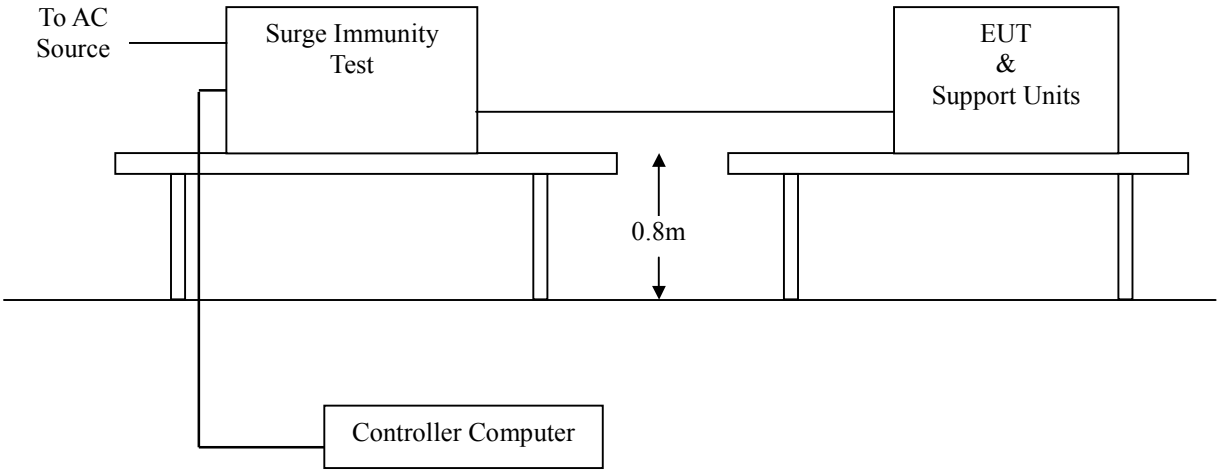

Test Procedure:

1. The EUT and support units were located on a wooden table 0.8 m away from ground floor.
2. Injected test voltage to the EUT ports from minimum to standard request or client request.
3. Recording the test result as shown in following table.

Test conditions:

Voltage Waveform : 1.2/50 *u*s
Current Waveform : 8/20 *u*s
Polarity : Positive/Negative
Phase angle : 0°, 90°, 270°
Number of Test : 5

Coupling Line	Voltage (kV)	Polarity	Coupling Method	Result (Pass/Fail)
L1-L2	1	Positive	Capacitive	Pass
L1-L2	1	Negative	Capacitive	Pass

Performance & Result:

☒ **Criteria A:** The apparatus continues to operate as intended. No degradation of performance or loss of function is allowed below a performance level specified by the manufacturer, when the apparatus is used as intended. In some cases the performance level may be replaced by a permissible loss of performance.

☐ **Criteria B:** The apparatus continues to operate as intended after the test. No degradation of performance or loss of function is allowed below a performance level specified by the manufacturer, when the apparatus is used as intended. In some cases the performance level may be replaced by a permissible loss of performance. During the test, degradation of performance is however allowed.

☐ **Criteria C:** Temporary loss of function is allowed, provided the functions self recoverable or can be restored by the operation of controls.

☒ **PASS** ☐ **FAIL**
Observation: No function degraded during the tests.

14 CONDUCTED DISTURBANCE/INDUCED RADIO-FREQUENCY FIELD IMMUNITY TEST

Port	:	AC Port
Basic Standard	:	IEC/EN 61000-4-6
Requirements	:	3 V with 80% AM. 1kHz Modulation.
Injection Method	:	CDN-M2 for Power Cord
Performance Criterion	:	A (Standard Required)
Tested by	:	Arno Hsieh
Temperature	:	24°C
Humidity	:	42% RH
Pressure	:	1006mbar

Block Diagram of Test Setup:

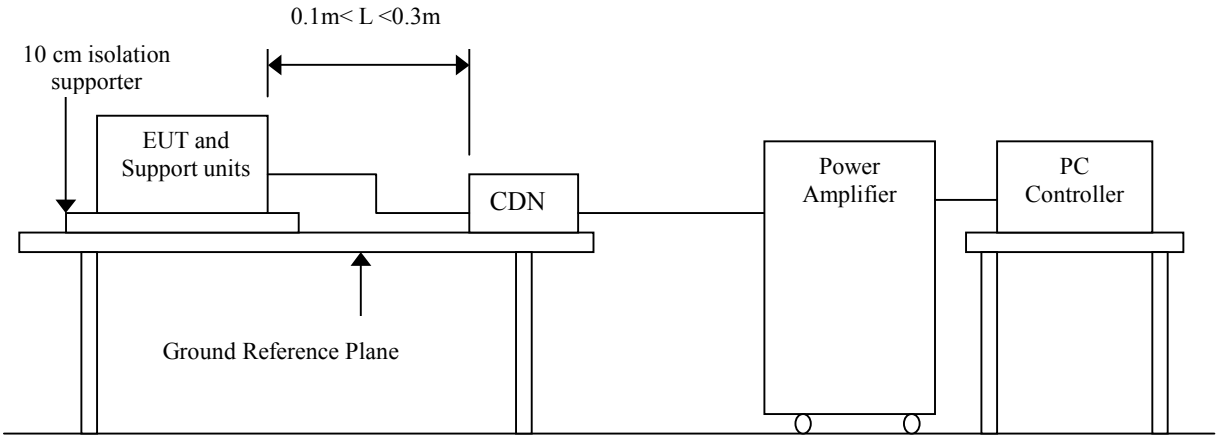

Test Procedure:

1. The EUT and support units were located at a ground reference plane with the interposition of a 0.1 m thickness insulating support and the CDN was located on GRP directly.
2. Setting the testing parameters of CS test software as per IEC/EN 61000-4-6.
3. Recording the test result in following table.

Test conditions:

Frequency Range : 0.15MHz-80MHz
Frequency Step : 1% of fundamental
Dwell Time : 3 sec

Range (MHz)	Field	Modulation	Result (Pass/Fail)
0.15-80	3V	Yes	Pass

Performance & Result:

☒ **Criteria A:** The apparatus continues to operate as intended. No degradation of performance or loss of function is allowed below a performance level specified by the manufacturer, when the apparatus is used as intended. In some cases the performance level may be replaced by a permissible loss of performance.

☐ **Criteria B:** The apparatus continues to operate as intended after the test. No degradation of performance or loss of function is allowed below a performance level specified by the manufacturer, when the apparatus is used as intended. In some cases the performance level may be replaced by a permissible loss of performance. During the test, degradation of performance is however allowed.

☐ **Criteria C:** Temporary loss of function is allowed, provided the functions self recoverable or can be restored by the operation of controls.

☒ **PASS** ☐ **FAIL**
Observation: No function degraded during the tests.

15 POWER FREQUENCY MAGNETIC FIELD IMMUNITY TEST

Port	:	Enclosure
Basic Standard	:	IEC/EN 61000-4-8
Requirements	:	1 A/m
Performance Criterion	:	A (Standard Required)
Tested by	:	Arno Hsieh
Temperature	:	24°C
Humidity	:	45% RH
Pressure	:	1006mbar

Block Diagram of Test Setup:

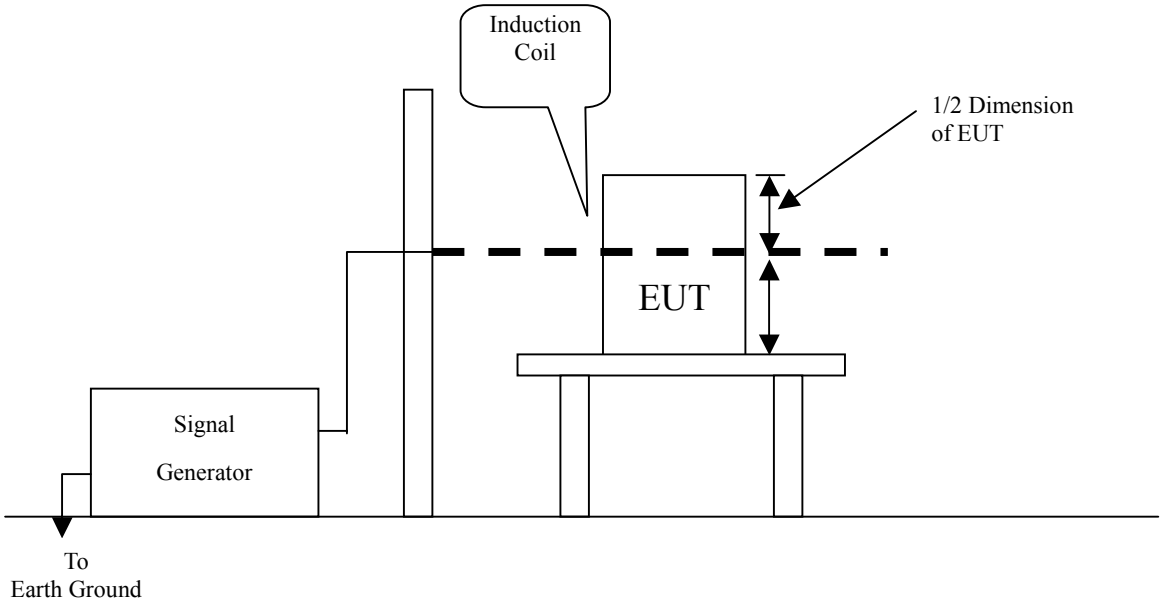

Test Procedure:

1. The EUT and support units were located on Ground Reference Plane with the interposition of a 0.1 m thickness insulation support.
2. Putting the induction coil on horizontal direction. (X direction)
3. Rotating the induction coil by 90° (Y direction)
4. Rotating the induction coil by 90° again (Z direction)
5. Recording the test result as shown in following table.

Test conditions:
Field Strength: 1A/m
Power Freq.: 50Hz
Orientation: X, Y, Z

Orientation	Field	Result (Pass/Fail)	Remark
X	1A/m	Pass	
Y	1A/m	Pass	
Z	1A/m	Pass	

Performance & Result:

☒ **Criteria A:** The apparatus continues to operate as intended. No degradation of performance or loss of function is allowed below a performance level specified by the manufacturer, when the apparatus is used as intended. In some cases the performance level may be replaced by a permissible loss of performance.

☐ **Criteria B:** The apparatus continues to operate as intended after the test. No degradation of performance or loss of function is allowed below a performance level specified by the manufacturer, when the apparatus is used as intended. In some cases the performance level may be replaced by a permissible loss of performance. During the test, degradation of performance is however allowed.

☐ **Criteria C:** Temporary loss of function is allowed, provided the functions self recoverable or can be restored by the operation of controls.

☒ **PASS** ☐ **FAIL**
Observation: No function degraded during the tests.

16 VOLTAGE DIPS / SHORT INTERRUPTIONS

Port : AC mains
Basic Standard : IEC/EN 61000-4-11
Requirement : PHASE ANGLE 0, 45, 90, 135, 180, 225, 270, 315 degrees

	Test Level % U_T	Reduction (%)	Duration (periods)	Performance Criteria
Voltage Dips	<5	>95	0.5	B
	70	30	25	C

	Test Level % U_T	Reduction (%)	Duration (periods)	Performance Criteria
Voltage Interceptions	<5	>95	250	C

Test Interval : Min. 10 sec.
Tested by : Arno Hsieh
Temperature : 24°C
Humidity : 45% RH
Pressure : 1006mbar

Block Diagram of Test Setup:

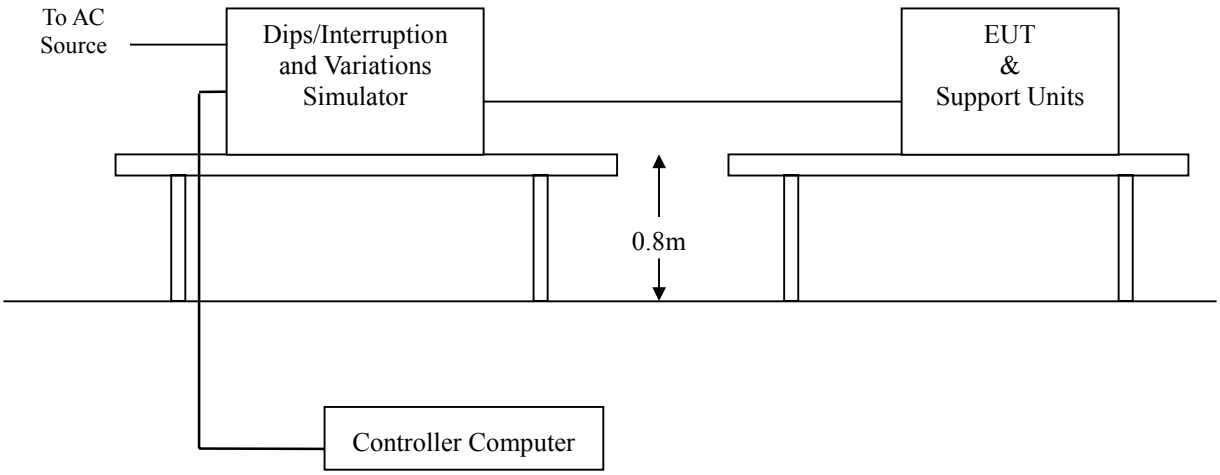

Test Procedure:

1. The EUT and support units were located on a wooden table, 0.8 m away from ground floor.
2. Setting the parameter of tests and then Perform the test software of test simulator.
3. Conditions changes to occur at 0 degree crossover point of the voltage waveform.
4. Recording the test result in test record form.
5. Removes the Battery Pack to test if any.

Test conditions

The duration with a sequence of three dips/interruptions with interval of 10 s minimum (Between each test event)

Voltage Dips:

Test Level % U_T	Reduction (%)	Duration (periods)	Observation	Meet Performance Criteria
0	100	0.5	Normal	A
70	30	25	Normal	A

Voltage Interruptions:

Test Level % U_T	Reduction (%)	Duration (periods)	Observation	Meet Performance Criteria
0	100	250	EUT shut down, but can be auto recovered as the events disappear.	B

Normal: *No any functions degrade during and after the test.*

Performance & Result:

Criteria A: The apparatus continues to operate as intended. No degradation of performance or loss of function is allowed below a performance level specified by the manufacturer, when the apparatus is used as intended. In some cases the performance level may be replaced by a permissible loss of performance.

Criteria B: The apparatus continues to operate as intended after the test. No degradation of performance or loss of function is allowed below a performance level specified by the manufacturer, when the apparatus is used as intended. In some cases the performance level may be replaced by a permissible loss of performance. During the test, degradation of performance is however allowed.

Criteria C: Temporary loss of function is allowed, provided the functions self recoverable or can be restored by the operation of controls.

☒ **PASS** ☐ **FAIL**

APPENDIX I - PHOTOGRAPHS OF TEST SETUP

LINE CONDUCTED EMISSION TEST (EN 55022)

RADIATED EMISSION TEST (EN 55022)

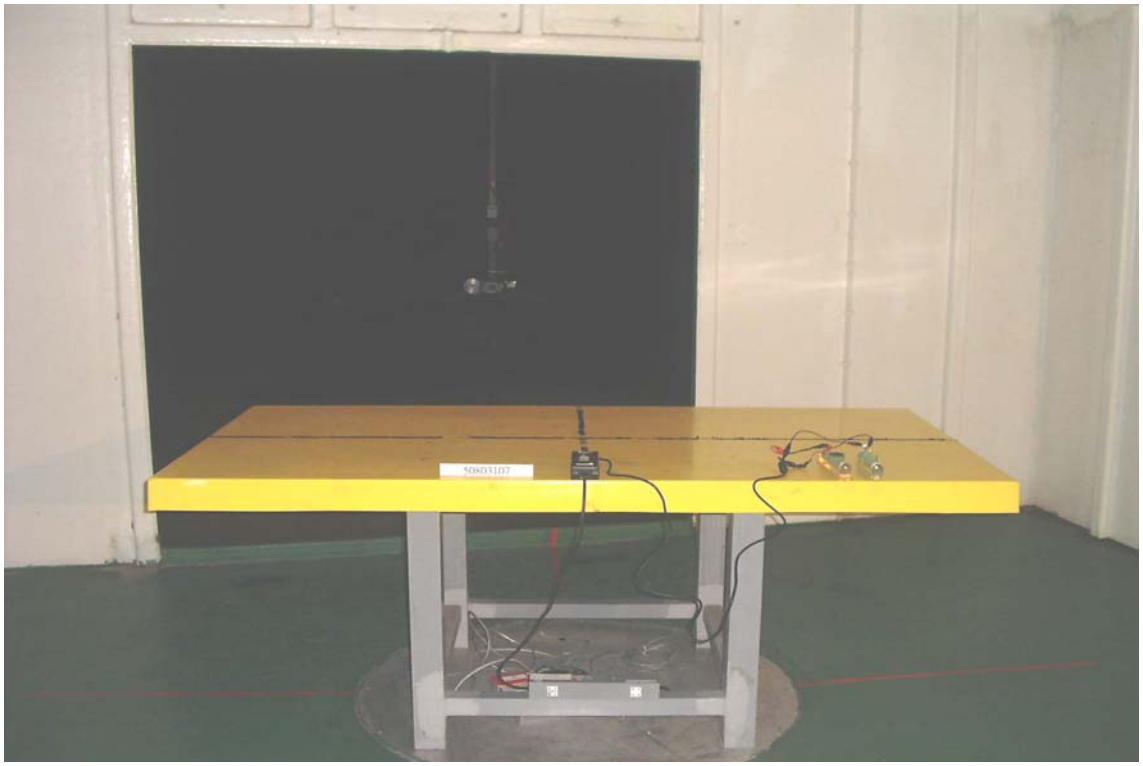

POWER HARMONIC & VOLTAGE FLUCTUATION / FLICKER TEST

ELECTROSTATIC DISCHARGE TEST

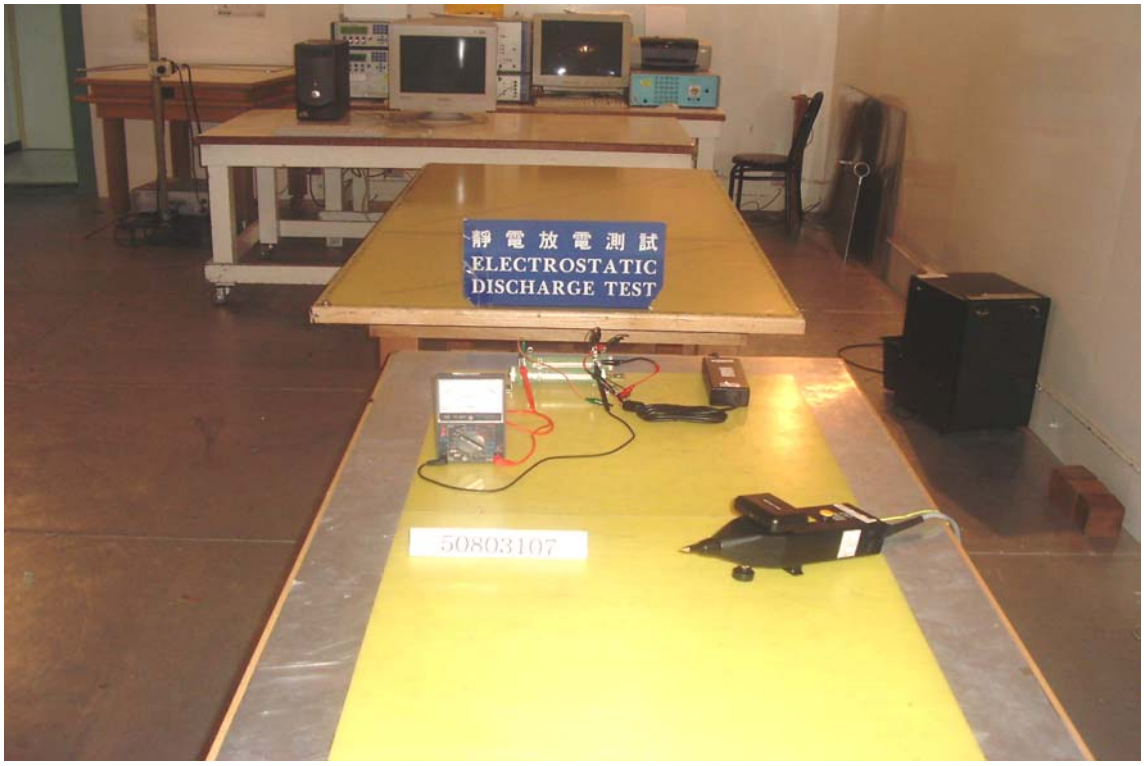

RADIATED ELECTROMAGNETIC FIELD TEST

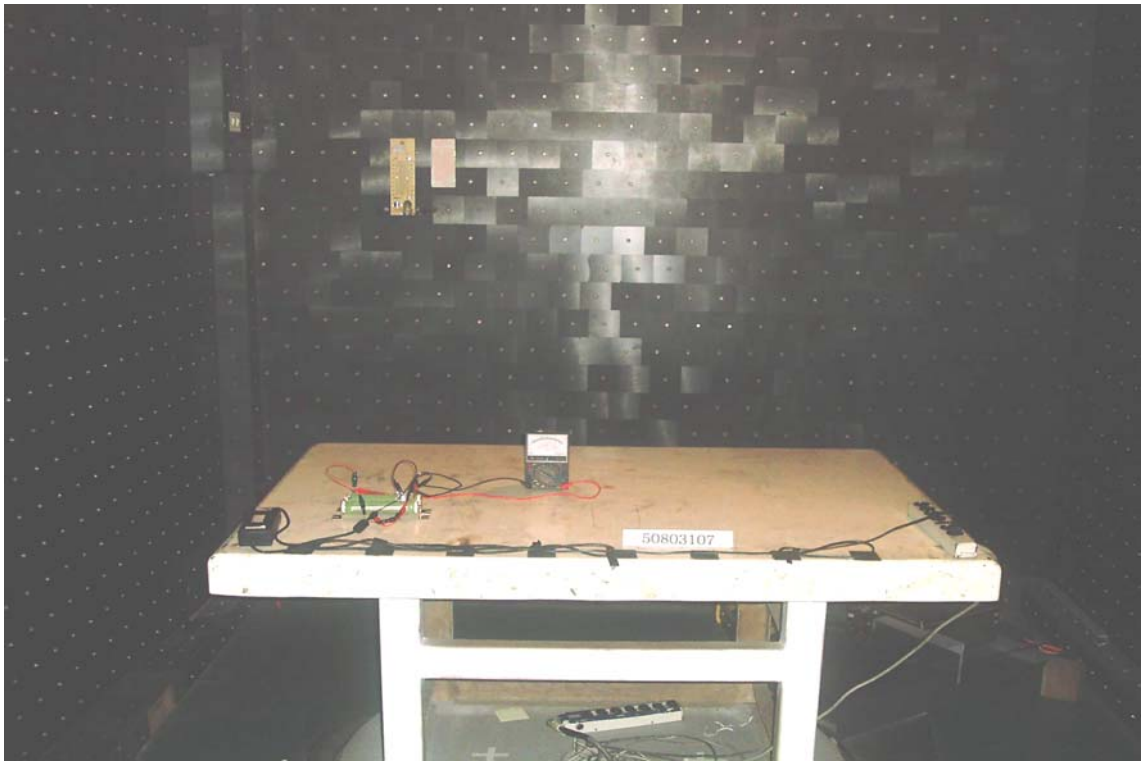

FAST TRANSIENTS/BURST TEST

SURGE IMMUNITY TEST

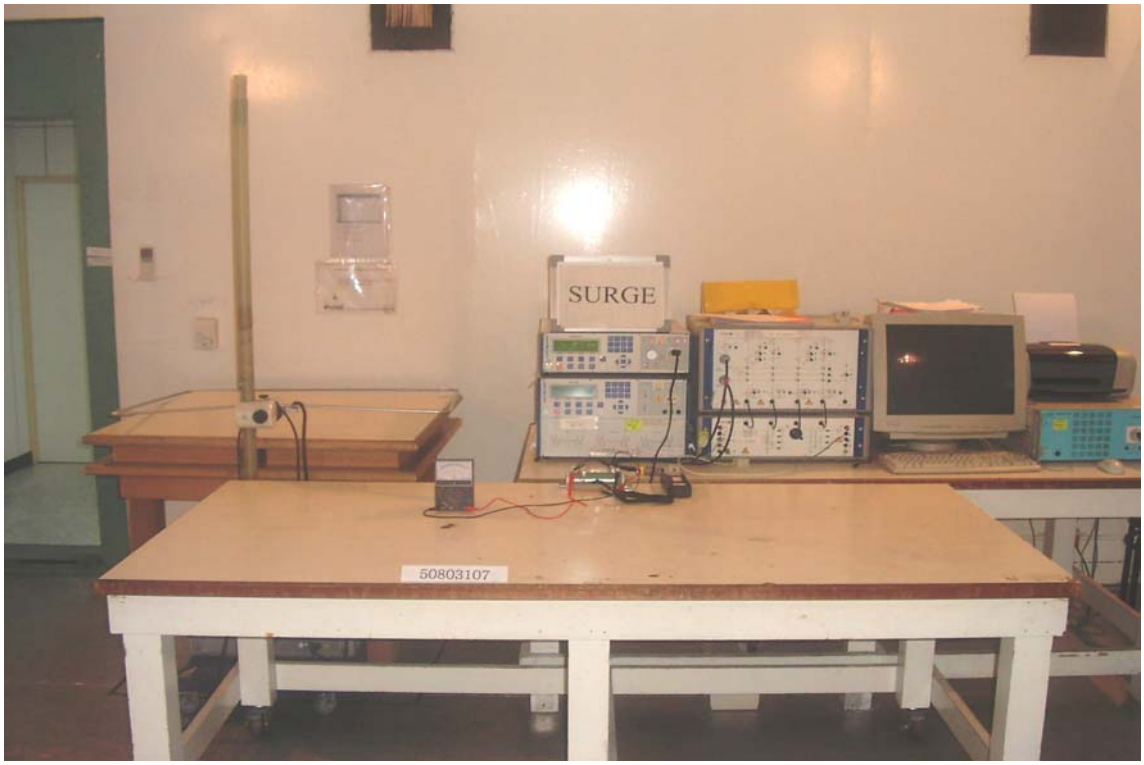

CONDUCTED DISTURBANCE, INDUCED BY RADIO-FREQUENCY FIELDS TEST

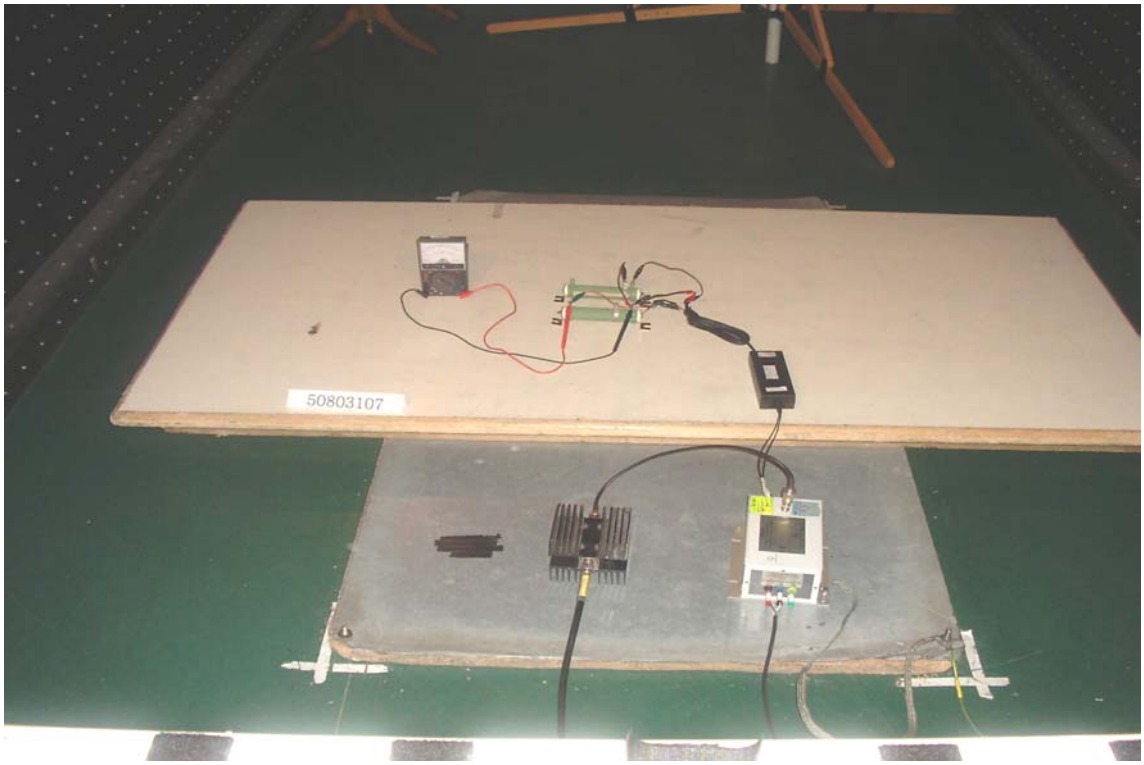

POWER FREQUENCY MAGNETIC FIELD IMMUNITY TEST

VOLTAGE DIPS / INTERRUPTION TEST

APPENDIX II – TEST RESULT OF EN 61000-3-2/-3

Harmonic Emission - IEC 61000-3-2 , EN 61000-3-2 , (EN60555-2)

Comply: IEC 61000-3-2 Ed.2.1 :2001 (incl. Amd.14) - IEC 61000-4-7 Ed.1.0 :1991

LE

HARCS Setup File : unnamed

HARCS Report File : unnamed

Operator :	Michael Chen
EUT :	Power Adaptor
Model No :	LE-0317A0524100uu
Remarks	TEMP:25 HUMD:53

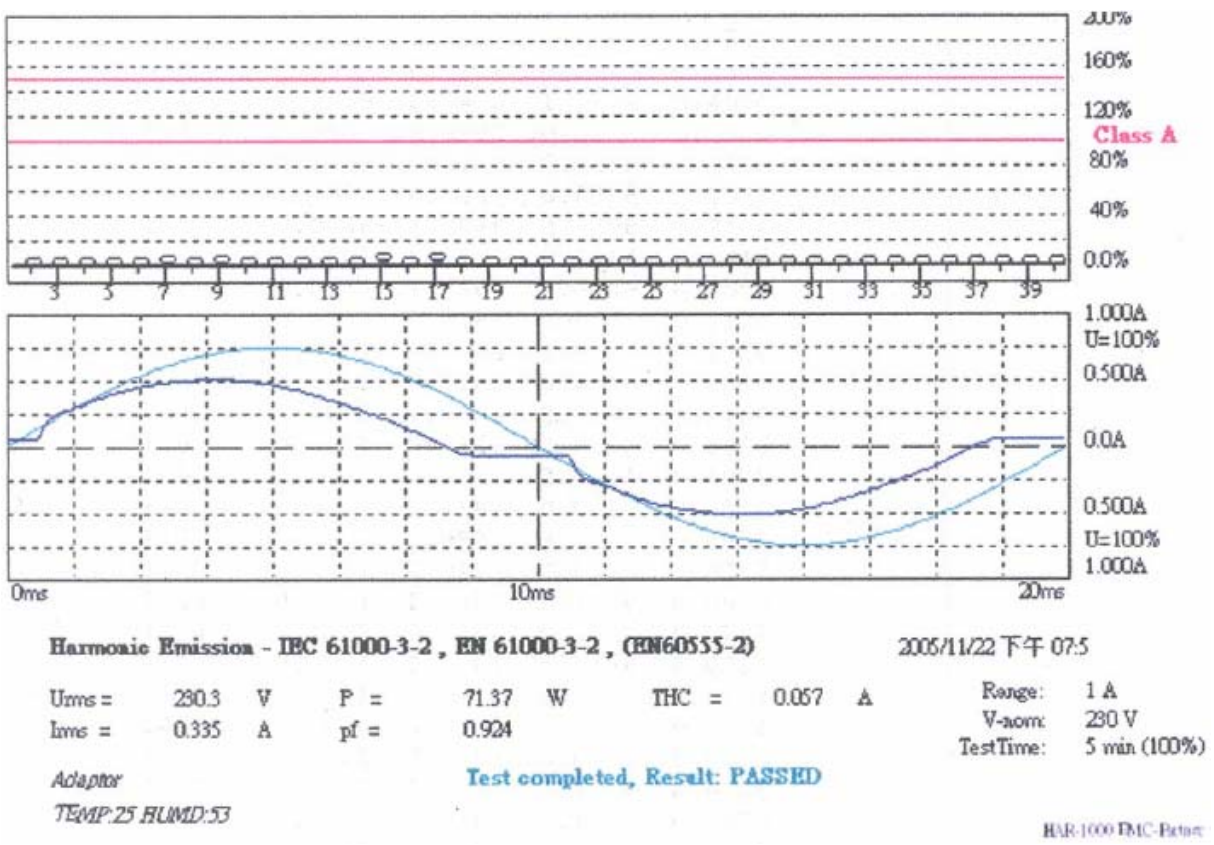

Full Bar : Actual Values

Empty Bar : Maximum Values

Blue : Current , Green : Voltage , Red : Failed

Measurement

LE Date : 2005/11/22 ¤U¤È 07:5 V4.10

File :

Operator : Michael Chen
EUT : Power Adaptor
Model No : LE-0317A0524100uu
Remarks TEMP:25 HUMD:53

Urms = 230.3V Freq = 49.987 Range: 1 A
Irms = 0.335A Ipk = 0.515A cf = 1.534
P = 71.37W S = 77.26VA pf = 0.924
THDi = 16.9 % THDu = 0.10 % Class A

Test - Time : 5min (100 %)

Test completed, Result: PASSED

Order	Freq. [Hz]	Imax [A]	Imax% [%]	Imax%L [%]	Limit [A]	Status
1	50	0.3316	98.854			
2	100	0.0001	0.0364	0.0113	1.0800	
3	150	0.0457	13.628	1.9876	2.3000	
4	200	0.0001	0.0364	0.0284	0.4300	
5	250	0.0262	7.8239	2.3022	1.1400	
6	300	0.0001	0.0182	0.0203	0.3000	
7	350	0.0168	5.0036	2.1798	0.7700	
8	400	0.0001	0.0182	0.0265	0.2300	
9	450	0.0079	2.3472	1.9684	0.4000	
10	500	0.0001	0.0182	0.0332	0.1840	
11	550	0.0032	0.9461	0.9618	0.3300	
12	600	0.0001	0.0182	0.0398	0.1533	
13	650	0.0046	1.3646	2.1798	0.2100	
14	700	0.0001	0.0182	0.0464	0.1314	
15	750	0.0057	1.7103	3.8249	0.1500	

16	800	0.0001	0.0182	0.0531	0.1150
17	850	0.0051	1.5284	3.8737	0.1324
18	900	0.0001	0.0182	0.0597	0.1022
19	950	0.0035	1.0553	2.9894	0.1184
20	1000	0.0001	0.0182	0.0663	0.0920
21	1050	0.0029	0.8734	2.7344	0.1071
22	1100	0.0001	0.0182	0.0730	0.0836
23	1150	0.0033	0.9825	3.3691	0.0978
24	1200	0.0001	0.0182	0.0796	0.0767
25	1250	0.0034	1.0007	3.7299	0.0900
26	1300	0.0001	0.0182	0.0862	0.0708
27	1350	0.0026	0.7824	3.1494	0.0833
28	1400	0.0001	0.0182	0.0929	0.0657
29	1450	0.0023	0.6732	2.9107	0.0776
30	1500	0.0001	0.0182	0.0995	0.0613
31	1550	0.0023	0.6732	3.1114	0.0726
32	1600	0.0001	0.0182	0.1061	0.0575
33	1650	0.0023	0.6732	3.3122	0.0682
34	1700	0.0001	0.0182	0.1128	0.0541
35	1750	0.0023	0.6732	3.5129	0.0643
36	1800	0.0001	0.0182	0.1194	0.0511
37	1850	0.0019	0.5640	3.1114	0.0608
38	1900	0.0001	0.0182	0.1261	0.0484
39	1950	0.0018	0.5277	3.0680	0.0577
40	2000	0.0001	0.0182	0.1327	0.0460

```
LE                              Date : 2005/11/22 PM 08:0 V4.10

File :

Operator :                      Michael Chen
EUT :                           Power Adaptor
Model No :                      LE-0317A0524100uu
Remarks                         TEMP:25 HUMD:53

Urms =  230.3V  Freq =  49.987  Range:  1 A
Irms =  0.334A  Ipk  =  0.511A  cf   =  1.528
P    =  71.12W  S    =  77.03VA pf   =  0.923

Test - Time :  1 x 10min = 10min      ( 100 %)

LIN (Line Impedance Network) : SLIN 0.24ohm +j0.15ohm N:0.16ohm +j0.10ohm

Limits :       Plt  :  0.65    Pst   : 1.00
               dmax :  4.00 %  dc    : 3.30 %
               dtLim:  3.30 %  dt>Lim: 500ms

Test completed, Result: PASSED

Plt  =  0.072

        Pst     dmax    dc      dt>Lim  Fail
                [%]     [%]     [ms]
1       0.072   0.000   0.000   0.000
```